DPH - BSP AUTO SIG

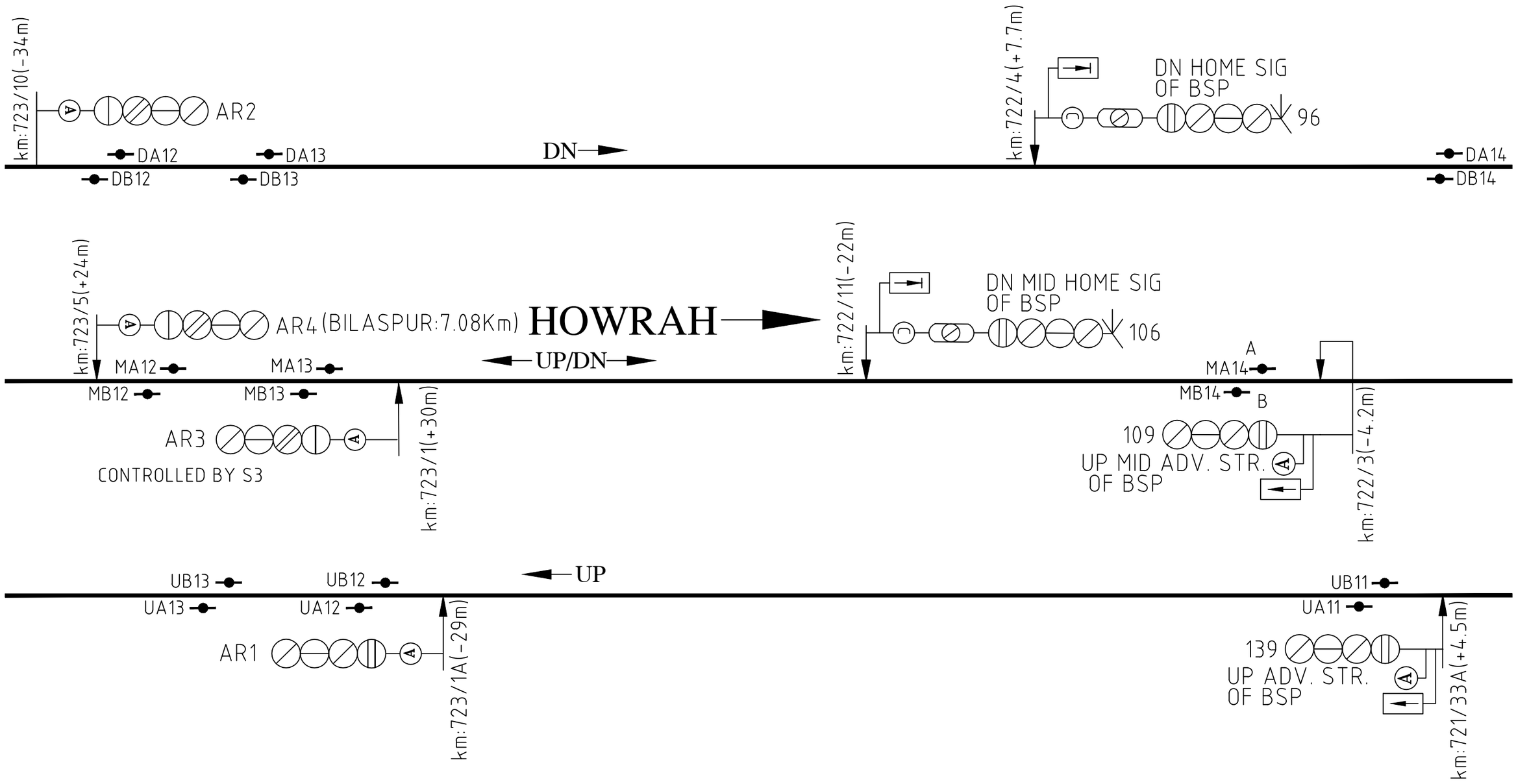

DADHAPARA

KM: 725.414 (OLD)

KM: 726.884 (OLD)

'SPL' CLASS,STD-III®

← UP/DN →

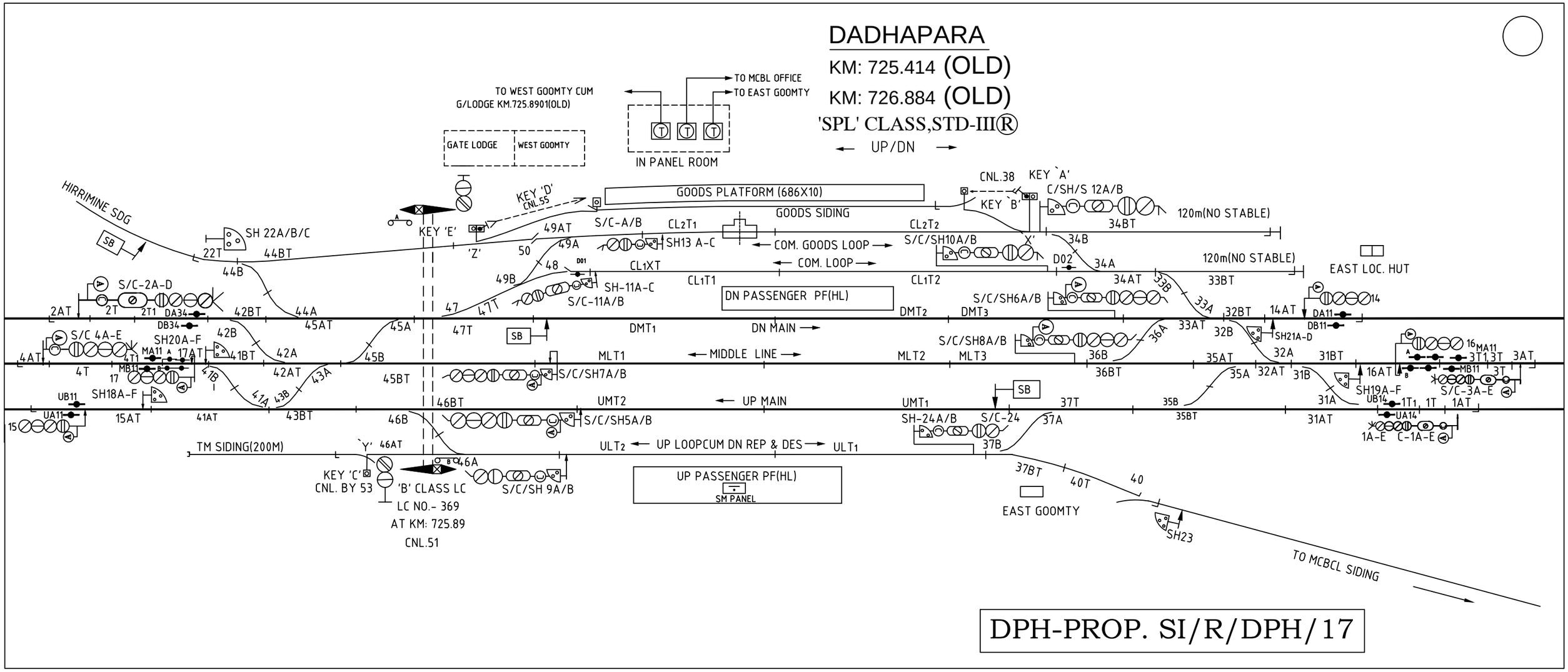

DPH-PROP. SI/R/DPH/17

BELHA - DADHAPARA AUTO SIG.

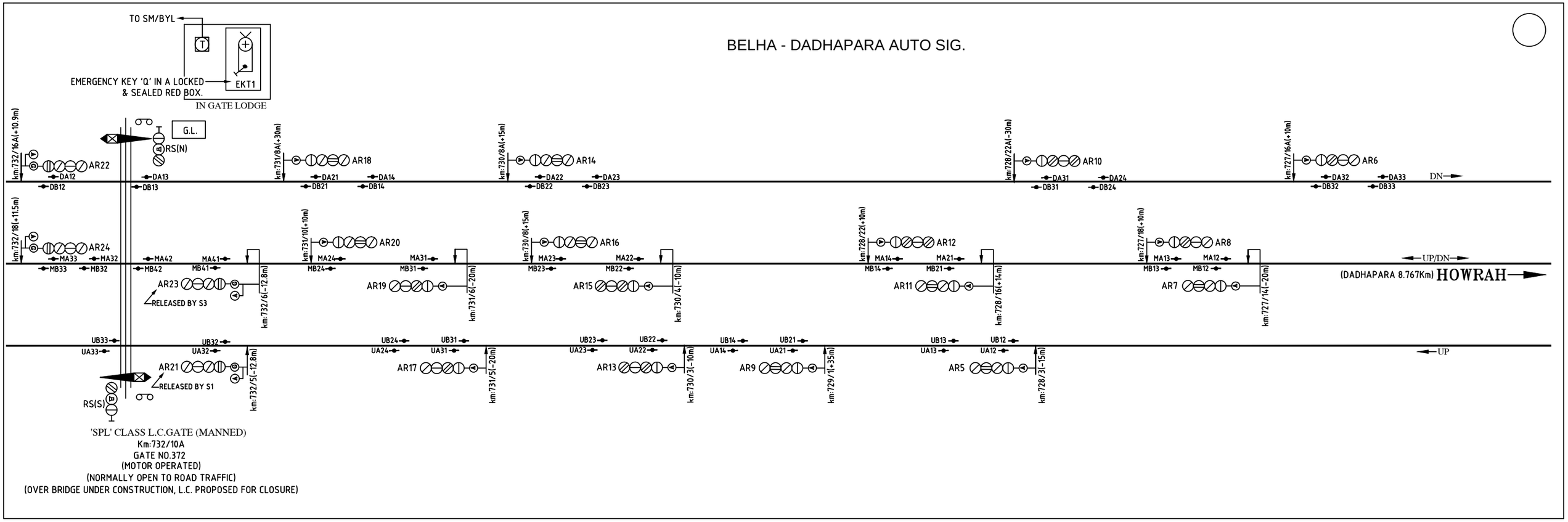

'SPL' CLASS L.C.GATE (MANNED)
Km:732/10A
GATE NO.372
(MOTOR OPERATED)
(NORMALLY OPEN TO ROAD TRAFFIC)
(OVER BRIDGE UNDER CONSTRUCTION, L.C. PROPOSED FOR CLOSURE)

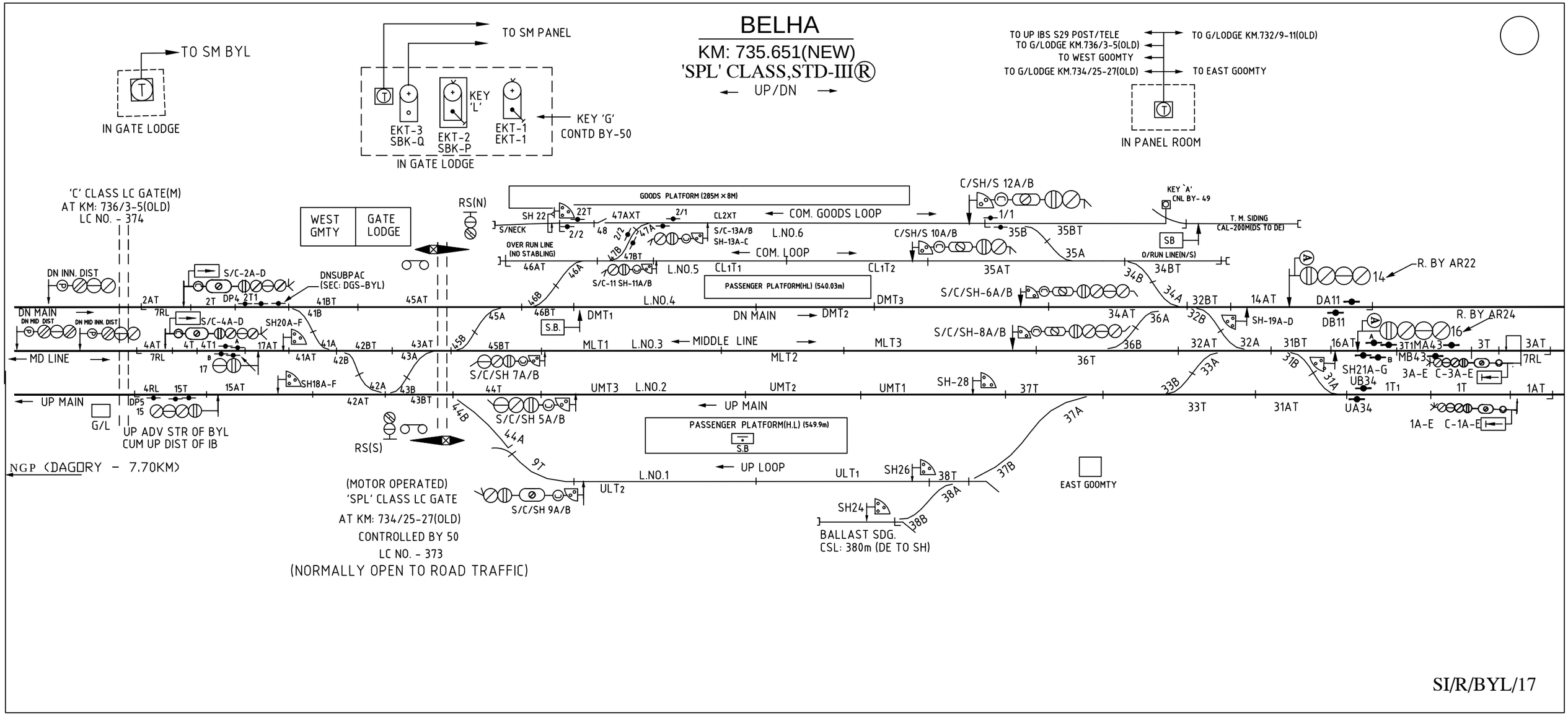
BELHA
KM: 735.651(NEW)
'SPL' CLASS,STD-III®
UP/DN
TO SM BYL
IN GATE LODGE
TO SM PANEL
EKT-3
SBK-Q
EKT-2
SBK-P
KEY 'L'
EKT-1
EKT-1
KEY 'G'
CONTD BY-50
IN GATE LODGE
TO UP IBS S29 POST/TELE
TO G/LODGE KM.736/3-5(OLD)
TO WEST GOOMTY
TO G/LODGE KM.734/25-27(OLD)
TO G/LODGE KM.732/9-11(OLD)
TO EAST GOOMTY
IN PANEL ROOM
'C' CLASS LC GATE(M)
AT KM: 736/3-5(OLD)
LC NO. - 374
WEST GMTY
GATE LODGE
RS(N)
GOODS PLATFORM (285M × 8M)
COM. GOODS LOOP
COM. LOOP
OVER RUN LINE (NO STABLING)
PASSENGER PLATFORM(HL) (540.03m)
PASSENGER PLATFORM(H.L) (549.9m)
KEY 'A' CNL BY- 49
T. M. SIDING CAL-200M(DS TO DE)
O/RUN LINE(N/S)
DN INN. DIST
DNSUBPAC (SEC: DGS-BYL)
DN MAIN
DN MID DIST
DN MID INN. DIST
MD LINE
MIDDLE LINE
UP MAIN
G/L
UP ADV STR OF BYL CUM UP DIST OF IB
NGP (DAGORY - 7.70KM)
RS(S)
(MOTOR OPERATED)
'SPL' CLASS LC GATE
AT KM: 734/25-27(OLD)
CONTROLLED BY 50
LC NO. - 373
(NORMALLY OPEN TO ROAD TRAFFIC)
UP LOOP
EAST GOOMTY
BALLAST SDG.
CSL: 380m (DE TO SH)
R. BY AR22
R. BY AR24

SI/R/BYL/17

BELHA

KM: 735.651(NEW)

'SPL' CLASS,STD-III

← UP/DN →

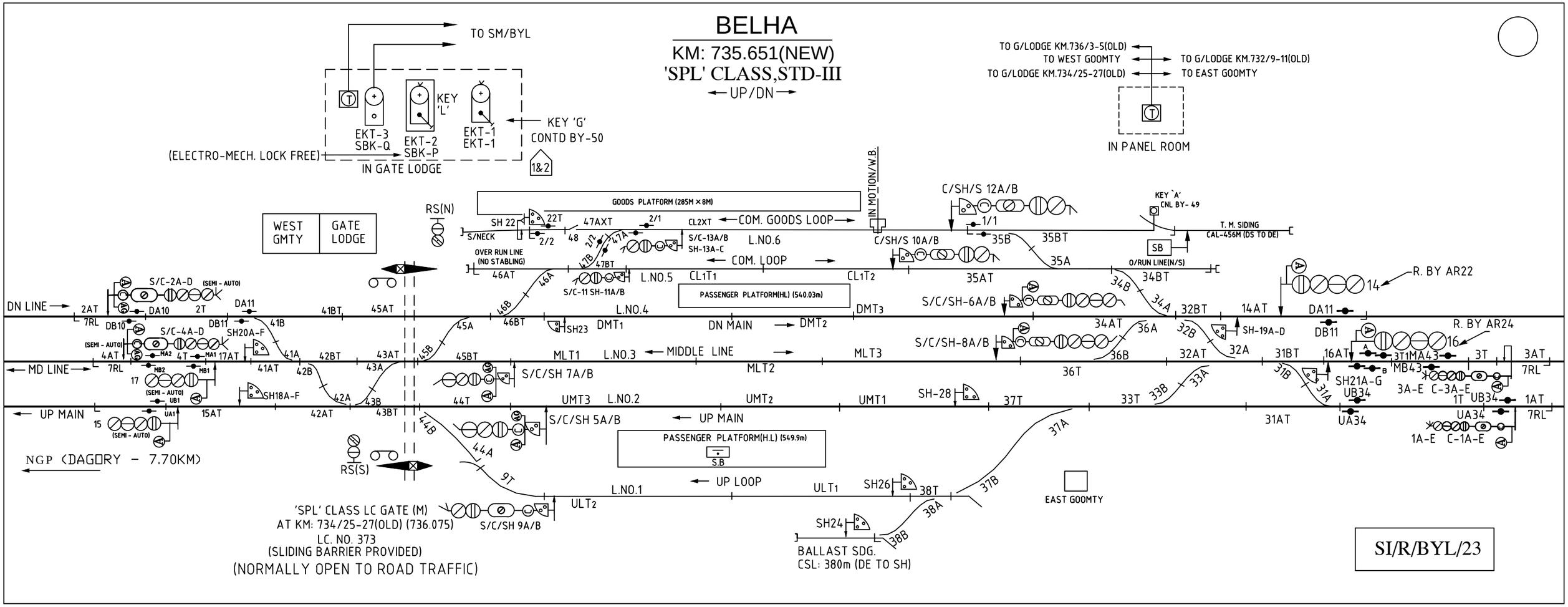

SI/R/BYL/23

BELHA - DAGORI AUTO SIG.

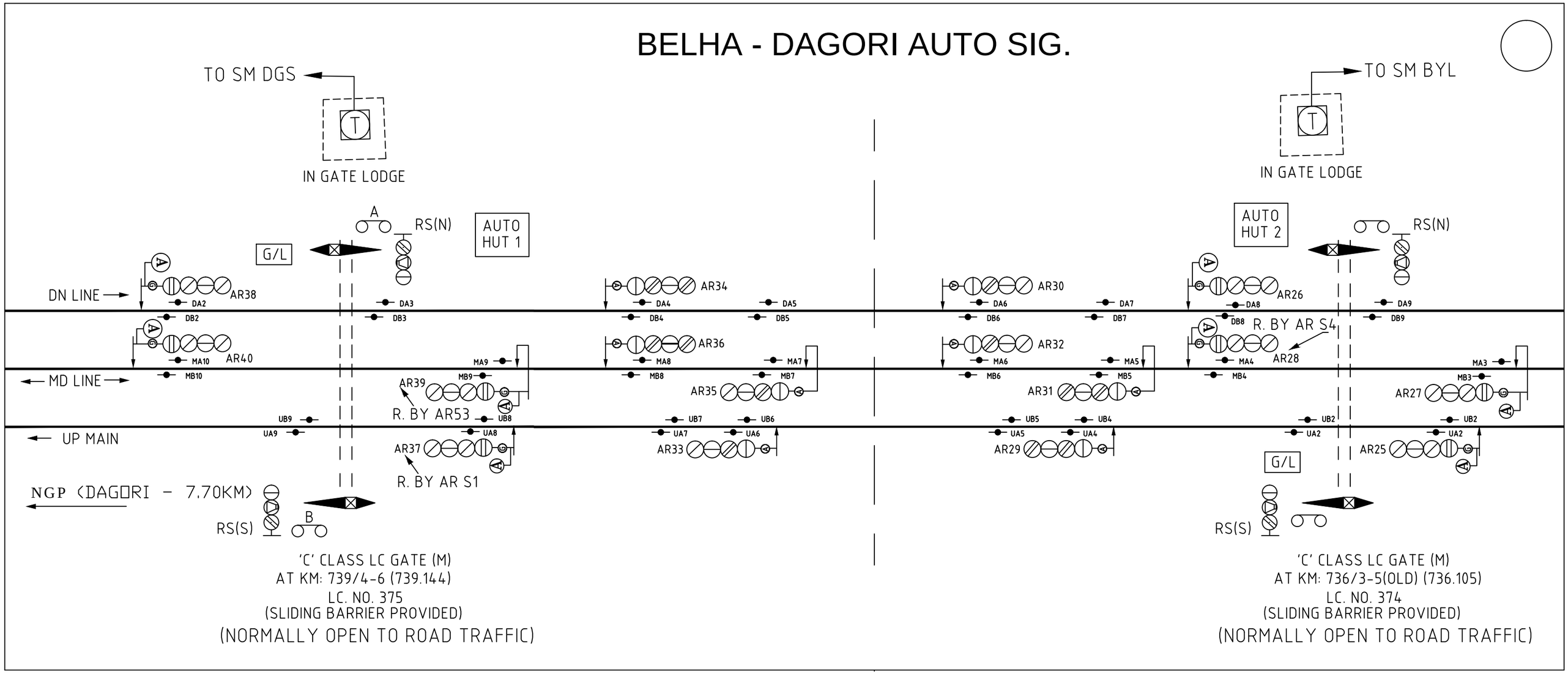

'C' CLASS LC GATE (M)
AT KM: 739/4-6 (739.144)
LC. NO. 375
(SLIDING BARRIER PROVIDED)
(NORMALLY OPEN TO ROAD TRAFFIC)

'C' CLASS LC GATE (M)
AT KM: 736/3-5(OLD) (736.105)
LC. NO. 374
(SLIDING BARRIER PROVIDED)
(NORMALLY OPEN TO ROAD TRAFFIC)

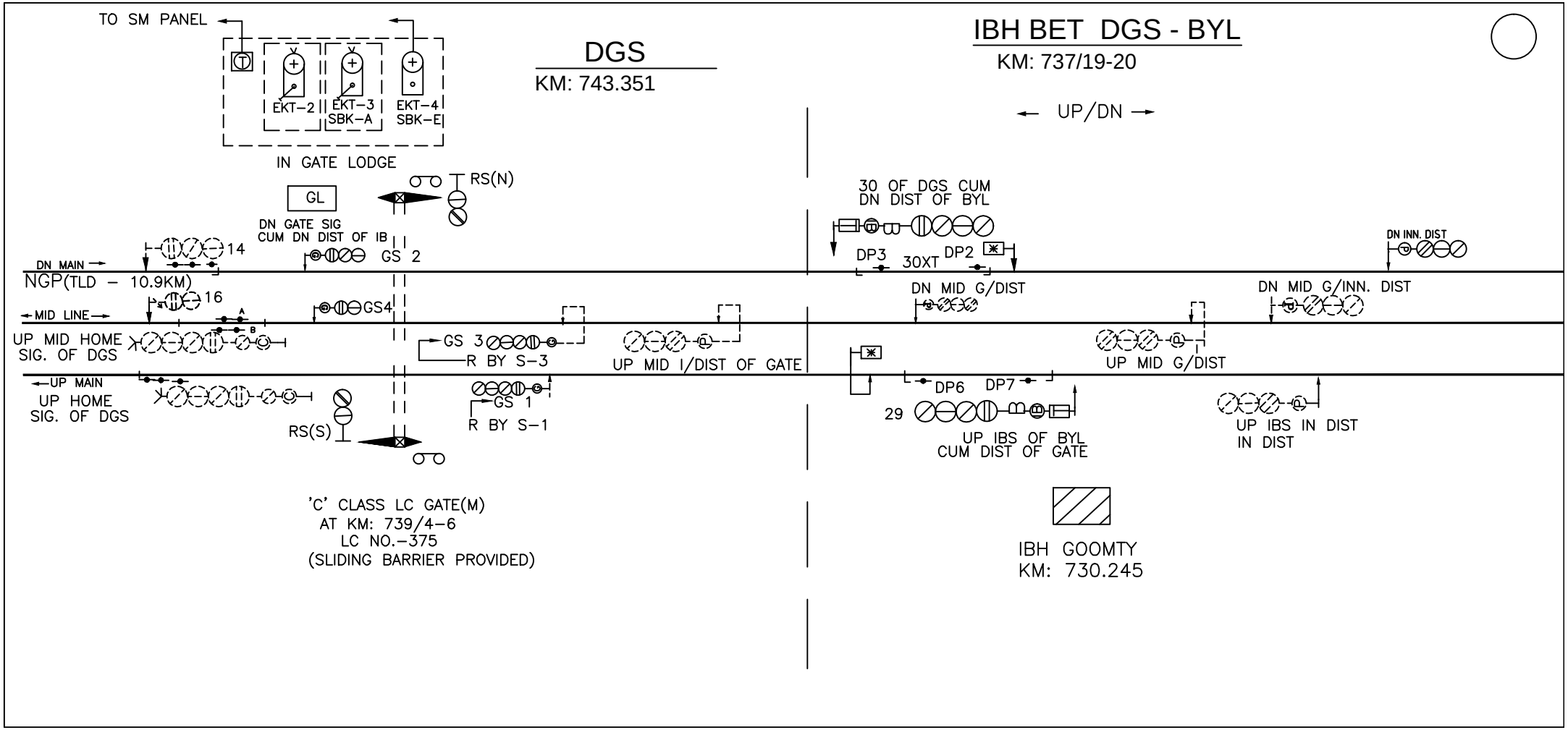
IBH BET DGS - BYL
KM: 737/19-20
DGS
KM: 743.351
UP/DN
TO SM PANEL
EKT-2
EKT-3
SBK-A
EKT-4
SBK-E
IN GATE LODGE
GL
RS(N)
DN GATE SIG
CUM DN DIST OF IB
14
GS 2
DN MAIN
NGP(TLD - 10.9KM)
16
MID LINE
GS4
UP MID HOME
SIG. OF DGS
GS 3
R BY S-3
UP MID I/DIST OF GATE
UP MAIN
UP HOME
SIG. OF DGS
RS(S)
GS 1
R BY S-1
30 OF DGS CUM
DN DIST OF BYL
DP3
30XT
DP2
DN MID G/DIST
DN INN. DIST
DN MID G/INN. DIST
UP MID G/DIST
DP6
DP7
29
UP IBS OF BYL
CUM DIST OF GATE
UP IBS IN DIST
IN DIST
'C' CLASS LC GATE(M)
AT KM: 739/4-6
LC NO.-375
(SLIDING BARRIER PROVIDED)
IBH GOOMTY
KM: 730.245

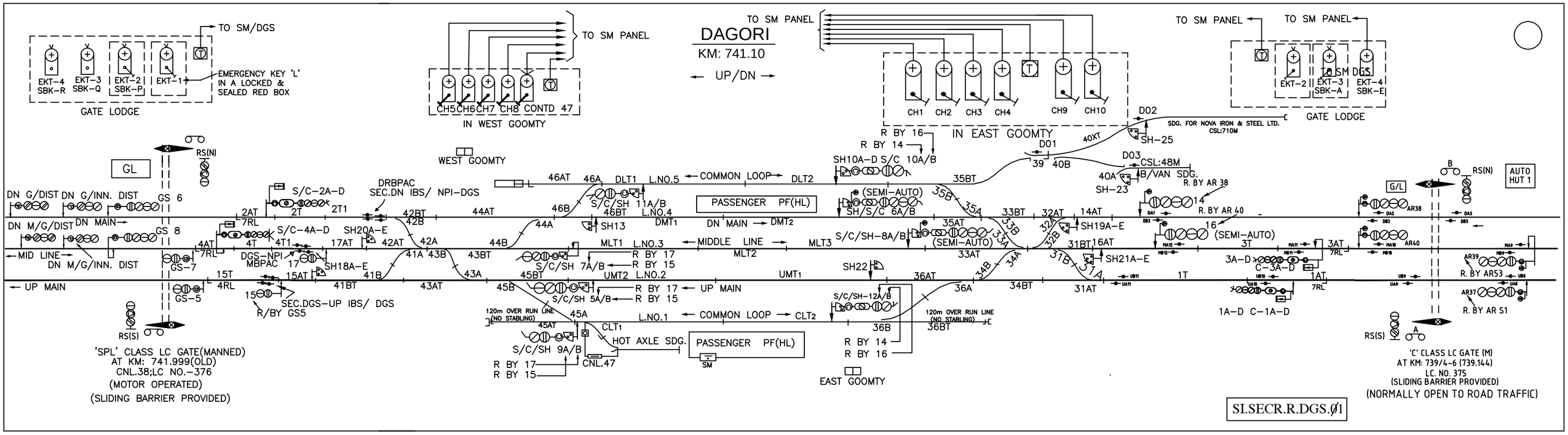
DAGORI
KM: 741.10
← UP/DN →
TO SM/DGS
EKT-4 SBK-R
EKT-3 SBK-Q
EKT-2 SBK-P
EKT-1
EMERGENCY KEY 'L' IN A LOCKED & SEALED RED BOX
GATE LODGE
TO SM PANEL
CH5 CH6 CH7 CH8 CONTD 47
IN WEST GOOMTY
WEST GOOMTY
CH1 CH2 CH3 CH4 CH9 CH10
IN EAST GOOMTY
EKT-2 EKT-3 SBK-A EKT-4 SBK-E
SDG. FOR NOVA IRON & STEEL LTD. CSL:710M
CSL:48M
AB/VAN SDG.
GL
G/L
AUTO HUT 1
RS(N)
RS(S)
DN G/DIST DN G/INN. DIST
DN M/G/DIST DN MAIN
MID LINE
DN M/G/INN. DIST
UP MAIN
DRBPAC SEC.DN IBS/ NPI-DGS
DGS-NPI MBPAC
SEC.DGS-UP IBS/ DGS
R/BY GS5
S/C-2A-D
S/C-4A-D
SH20A-E
SH18A-E
SH19A-E
SH21A-E
SH22
SH-25
SH-23
SH13
SH10A-D S/C 10A/B
SH/S/C 6A/B
S/C/SH-8A/B
S/C/SH-12A/B
S/C/SH 11A/B
S/C/SH 7A/B
S/C/SH 5A/B
S/C/SH 9A/B
R BY 16
R BY 14
R BY 17
R BY 15
R. BY AR 38
R. BY AR 40
R. BY AR53
R. BY AR S1
COMMON LOOP
PASSENGER PF(HL)
MIDDLE LINE
HOT AXLE SDG.
CNL.47
120m OVER RUN LINE (NO STABLING)
EAST GOOMTY
(SEMI-AUTO)
1A-D C-1A-D
3A-D C-3A-D
'SPL' CLASS LC GATE(MANNED)
AT KM: 741.999(OLD)
CNL.38;LC NO.-376
(MOTOR OPERATED)
(SLIDING BARRIER PROVIDED)
'C' CLASS LC GATE (M)
AT KM: 739/4-6 (739.144)
LC. NO. 375
(SLIDING BARRIER PROVIDED)
(NORMALLY OPEN TO ROAD TRAFFIC)
SI.SECR.R.DGS.Ø1

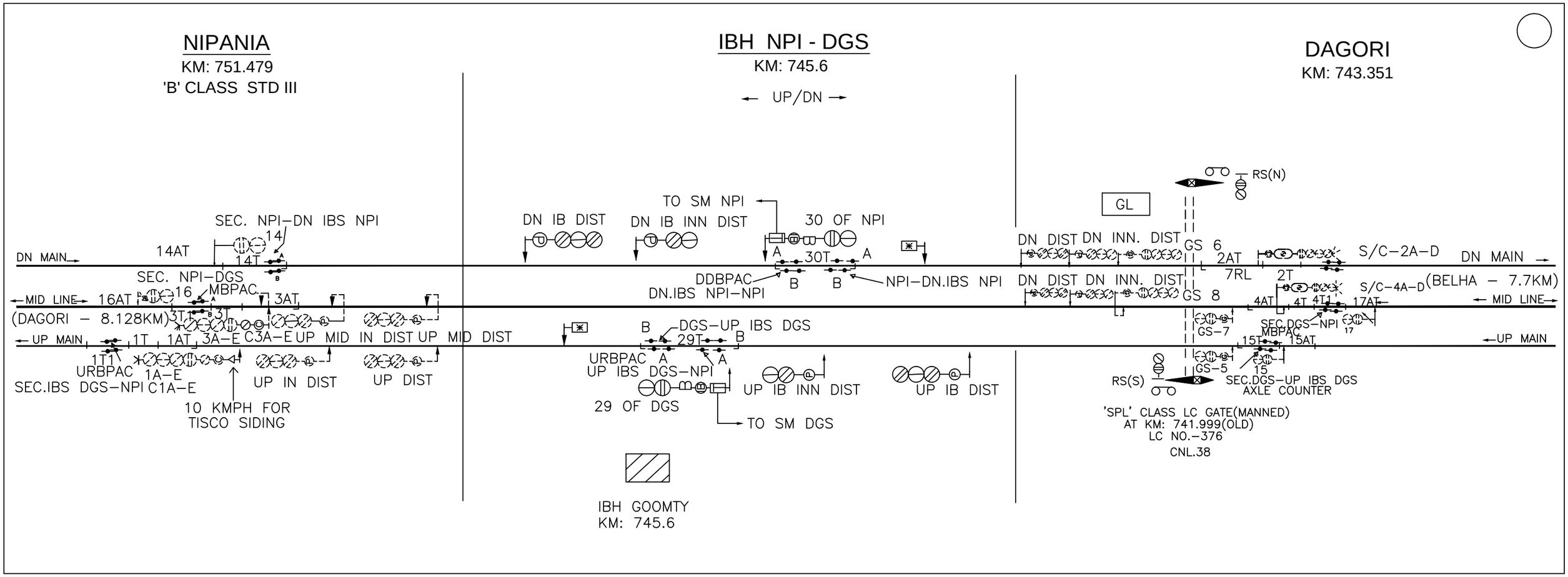
NIPANIA
KM: 751.479
'B' CLASS STD III
IBH NPI - DGS
KM: 745.6
UP/DN
DAGORI
KM: 743.351
DN MAIN
MID LINE
UP MAIN
14AT
SEC. NPI-DN IBS NPI
14
14T
SEC. NPI-DGS
16AT
16
MBPAC
3AT
(DAGORI - 8.128KM)
3T
1T
1AT
3A-E
C3A-E
UP MID
IN DIST
UP MID DIST
1T1
URBPAC
1A-E
SEC.IBS DGS-NPI
C1A-E
UP IN DIST
UP DIST
10 KMPH FOR
TISCO SIDING
DN IB DIST
DN IB INN DIST
TO SM NPI
30 OF NPI
30T
DDBPAC
DN.IBS NPI-NPI
NPI-DN.IBS NPI
DGS-UP IBS DGS
29T
URBPAC
UP IBS DGS-NPI
29 OF DGS
TO SM DGS
UP IB INN DIST
UP IB DIST
IBH GOOMTY
KM: 745.6
GL
RS(N)
DN DIST
DN INN. DIST
GS 6
2AT
7RL
2T
S/C-2A-D
(BELHA - 7.7KM)
GS 8
4AT
4T
4T1
17AT
S/C-4A-D
SEC.DGS-NPI
17
GS-7
15T
MBPAC
15AT
GS-5
15
RS(S)
SEC.DGS-UP IBS DGS
AXLE COUNTER
'SPL' CLASS LC GATE(MANNED)
AT KM: 741.999(OLD)
LC NO.-376
CNL.38

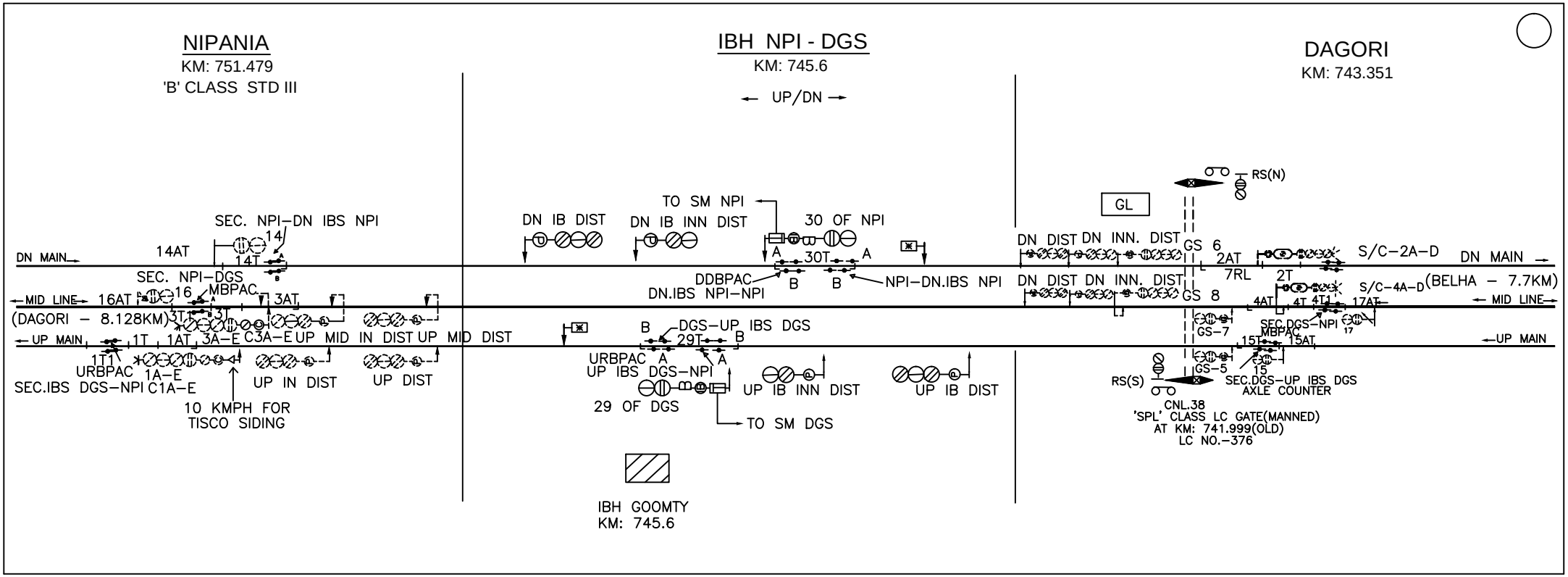
NIPANIA
KM: 751.479
'B' CLASS STD III
IBH NPI - DGS
KM: 745.6
UP/DN
DAGORI
KM: 743.351
DN MAIN
MID LINE
UP MAIN
(DAGORI – 8.128KM)
(BELHA – 7.7KM)
SEC. NPI–DN IBS NPI
14AT
14
14T
SEC. NPI–DGS
16AT
16
MBPAC
3AT
3T
3T
1T
1AT
3A–E
C3A–E
UP MID IN DIST
UP MID DIST
1T1
URBPAC
1A–E
SEC.IBS DGS–NPI
C1A–E
UP IN DIST
UP DIST
10 KMPH FOR
TISCO SIDING
DN IB DIST
DN IB INN DIST
TO SM NPI
30 OF NPI
A
30T
A
DDBPAC
B
B
DN.IBS NPI–NPI
NPI–DN.IBS NPI
B
DGS–UP IBS DGS
29T
B
URBPAC A
A
UP IBS DGS–NPI
29 OF DGS
TO SM DGS
UP IB INN DIST
UP IB DIST
IBH GOOMTY
KM: 745.6
GL
RS(N)
DN DIST DN INN. DIST
GS 6
2AT
7RL
2T
S/C–2A–D
DN MAIN
DN DIST DN INN. DIST
GS 8
4AT
4T
4T1
17AT
S/C–4A–D
MID LINE
SEC DGS–NPI
17
GS–7
MBPAC
15T
15AT
UP MAIN
GS–5
15
RS(S)
SEC.DGS–UP IBS DGS
AXLE COUNTER
CNL.38
'SPL' CLASS LC GATE(MANNED)
AT KM: 741.999(OLD)
LC NO.–376

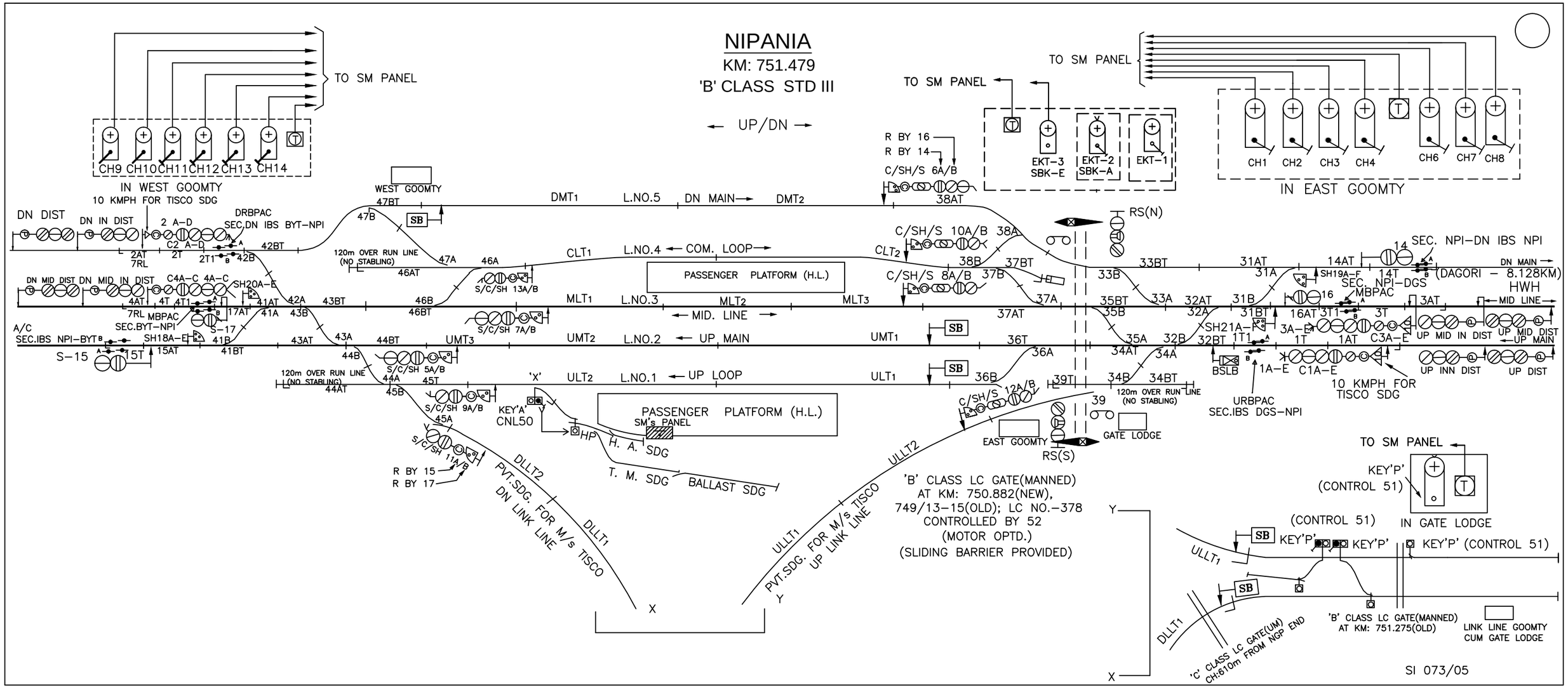
NIPANIA
KM: 751.479
'B' CLASS STD III
← UP/DN →
TO SM PANEL
CH9 CH10 CH11 CH12 CH13 CH14
IN WEST GOOMTY
10 KMPH FOR TISCO SDG
WEST GOOMTY
DN DIST
DN IN DIST
DRBPAC
SEC.DN IBS BYT–NPI
DMT1
L.NO.5
DN MAIN→
DMT2
R BY 16
R BY 14
C/SH/S 6A/B
EKT–3 SBK–E
EKT–2 SBK–A
EKT–1
CH1 CH2 CH3 CH4 CH6 CH7 CH8
IN EAST GOOMTY
RS(N)
120m OVER RUN LINE (NO STABLING)
CLT1
L.NO.4 ← COM. LOOP→
CLT2
C/SH/S 10A/B
C/SH/S 8A/B
PASSENGER PLATFORM (H.L.)
SEC. NPI–DN IBS NPI
(DAGORI – 8.128KM)
HWH
DN MID DIST
DN MID IN DIST
SEC. NPI–DGS
MBPAC
MLT1
L.NO.3
MLT2
MLT3
← MID. LINE →
MID LINE
A/C
SEC.IBS NPI–BYT
SEC.BYT–NPI
S–15
S–17
UMT3
UMT2
L.NO.2
← UP MAIN
UMT1
UP MID IN DIST
UP MID DIST
UP MAIN
'X'
ULT2
L.NO.1
← UP LOOP
ULT1
BSLB
URBPAC
SEC.IBS DGS–NPI
10 KMPH FOR TISCO SDG
UP INN DIST
UP DIST
KEY'A'
CNL50
HP
H. A. SDG
SM's PANEL
T. M. SDG
BALLAST SDG
EAST GOOMTY
RS(S)
GATE LODGE
R BY 15
R BY 17
DLLT2
PVT.SDG. FOR M/s TISCO DN LINK LINE
DLLT1
ULLT2
ULLT1
PVT.SDG. FOR M/s TISCO UP LINK LINE
'B' CLASS LC GATE(MANNED)
AT KM: 750.882(NEW),
749/13–15(OLD); LC NO.–378
CONTROLLED BY 52
(MOTOR OPTD.)
(SLIDING BARRIER PROVIDED)
TO SM PANEL
KEY'P'
(CONTROL 51)
IN GATE LODGE
KEY'P' (CONTROL 51)
'B' CLASS LC GATE(MANNED)
AT KM: 751.275(OLD)
LINK LINE GOOMTY
CUM GATE LODGE
'C' CLASS LC GATE(UM)
CH:610m FROM NGP END
SI 073/05

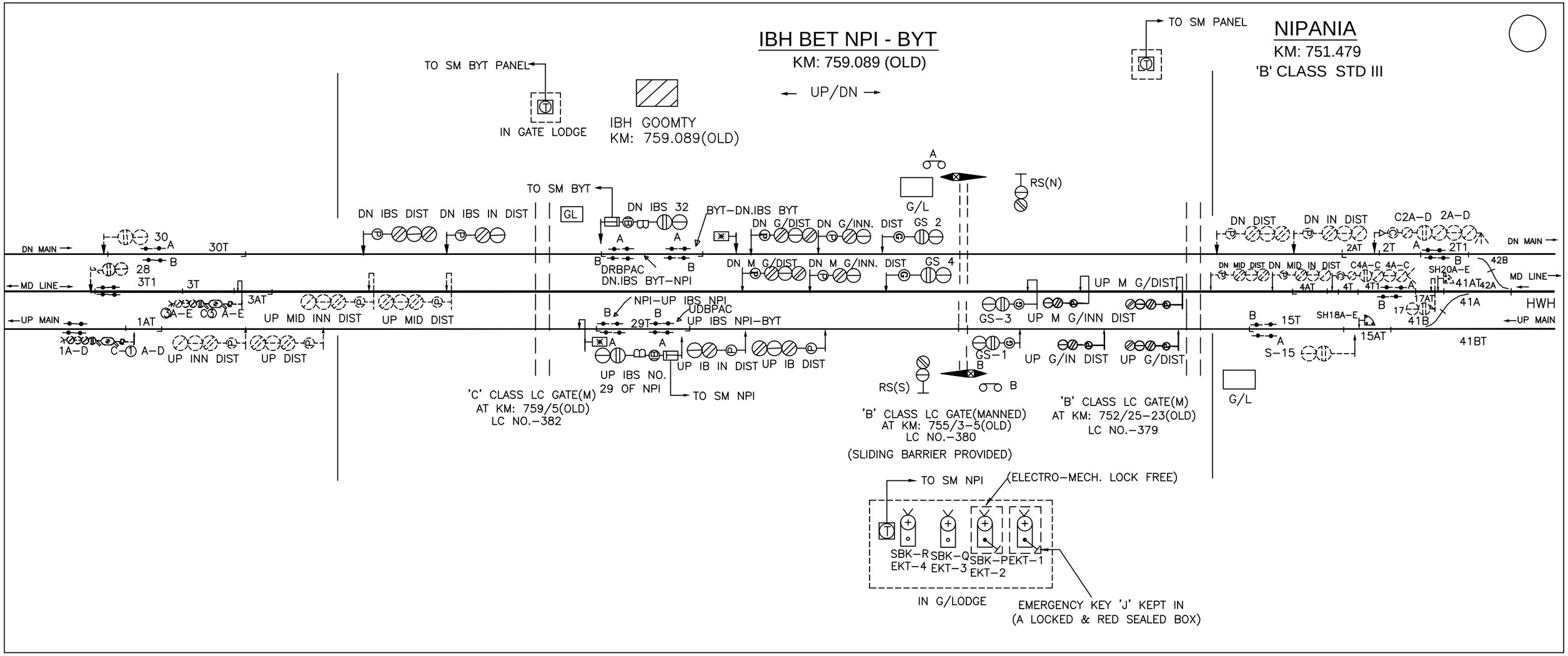
IBH BET NPI - BYT
KM: 759.089 (OLD)
← UP/DN →
NIPANIA
KM: 751.479
'B' CLASS STD III
TO SM PANEL
TO SM BYT PANEL
IN GATE LODGE
IBH GOOMTY
KM: 759.089(OLD)
TO SM BYT
RS(N)
G/L
DN IBS DIST
DN IBS IN DIST
GL
DN IBS 32
BYT-DN.IBS BYT
DN G/DIST
DN G/INN.
DIST
GS 2
DN M G/DIST
DN M G/INN.
GS 4
DRBPAC
DN.IBS BYT-NPI
NPI-UP IBS NPI
UDBPAC
UP IBS NPI-BYT
UP IBS NO.
29 OF NPI
TO SM NPI
UP IB IN DIST
UP IB DIST
UP M G/DIST
GS-3
UP M G/INN DIST
GS-1
UP G/IN DIST
UP G/DIST
RS(S)
DN DIST
DN IN DIST
C2A-D
2A-D
DN MID DIST
DN MID IN DIST
C4A-C
4A-C
SH20A-E
SH18A-E
DN MAIN
MD LINE
UP MAIN
HWH
30
28
30T
3T1
3T
3AT
1AT
A-E
C
A-E
UP MID INN DIST
UP MID DIST
1A-D
C-1
A-D
UP INN DIST
UP DIST
29T
2AT
2T
2T1
4AT
4T
4T1
42B
41AT
42A
17AT
17
41B
41A
15T
15AT
S-15
41BT
'C' CLASS LC GATE(M)
AT KM: 759/5(OLD)
LC NO.-382
'B' CLASS LC GATE(MANNED)
AT KM: 755/3-5(OLD)
LC NO.-380
(SLIDING BARRIER PROVIDED)
'B' CLASS LC GATE(M)
AT KM: 752/25-23(OLD)
LC NO.-379
(ELECTRO-MECH. LOCK FREE)
SBK-R
EKT-4
SBK-Q
EKT-3
SBK-P
EKT-2
EKT-1
IN G/LODGE
EMERGENCY KEY 'J' KEPT IN
(A LOCKED & RED SEALED BOX)

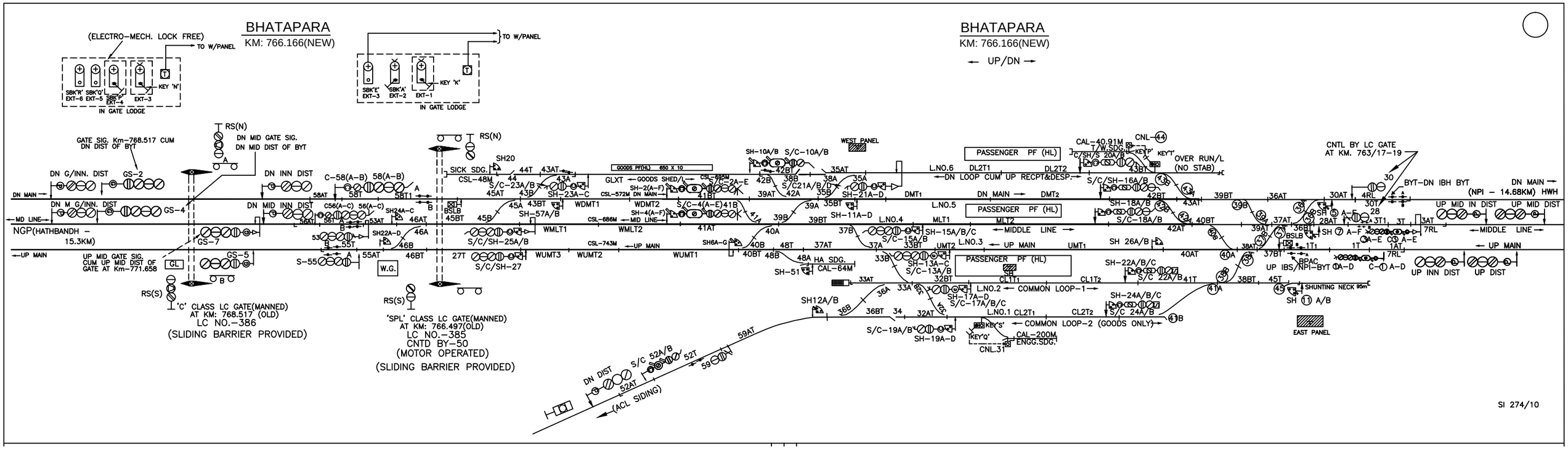
BHATAPARA
KM: 766.166(NEW)
(ELECTRO-MECH. LOCK FREE)
TO W/PANEL
IN GATE LODGE
BHATAPARA
KM: 766.166(NEW)
← UP/DN →
GATE SIG. Km-768.517 CUM DN DIST OF BYT
DN MID GATE SIG.
DN MID DIST OF BYT
DN G/INN. DIST
DN INN DIST
DN MAIN
MD LINE
NGP(HATHBANDH – 15.3KM)
UP MAIN
UP MID GATE SIG. CUM UP MID DIST OF GATE AT Km-771.658
'C' CLASS LC GATE(MANNED) AT KM: 768.517 (OLD)
LC NO.-386
(SLIDING BARRIER PROVIDED)
'SPL' CLASS LC GATE(MANNED) AT KM: 766.497(OLD)
LC NO.-385
CNTD BY-50
(MOTOR OPERATED)
(SLIDING BARRIER PROVIDED)
SICK SDG.
GOODS SHED/L
GOODS PF(HL) 650 X 10
WEST PANEL
PASSENGER PF (HL)
L.NO.6
L.NO.5
L.NO.4
L.NO.3
L.NO.2
L.NO.1
DN LOOP CUM UP RECPT&DESP.
OVER RUN/L (NO STAB)
CNTL BY LC GATE AT KM. 763/17-19
BYT-DN IBH BYT
DN MAIN (NPI – 14.68KM) HWH
UP MID IN DIST
UP MID DIST
UP INN DIST
UP DIST
MIDDLE LINE
COMMON LOOP-1
COMMON LOOP-2 (GOODS ONLY)
SHUNTING NECK 95m
EAST PANEL
DN DIST
(ACL SIDING)
SI 274/10

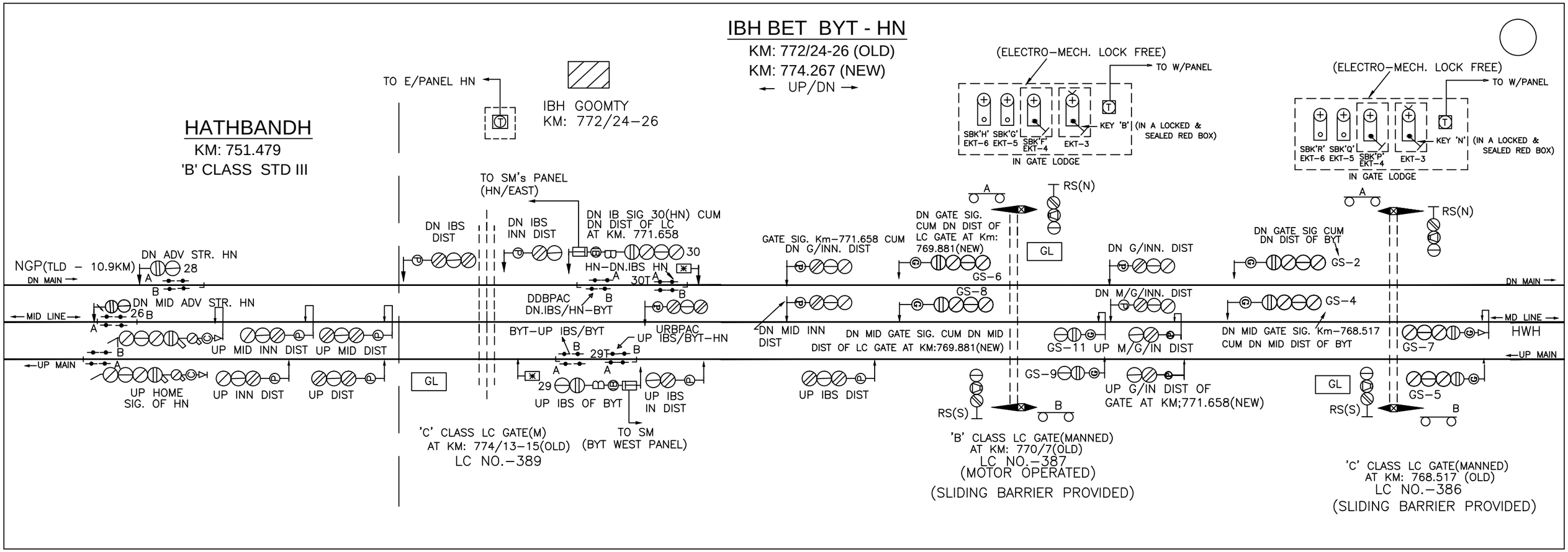
IBH BET BYT - HN
KM: 772/24-26 (OLD)
KM: 774.267 (NEW)
← UP/DN →
HATHBANDH
KM: 751.479
'B' CLASS STD III
TO E/PANEL HN
IBH GOOMTY
KM: 772/24-26
(ELECTRO-MECH. LOCK FREE)
TO W/PANEL
SBK'H' SBK'G' SBK'F'
EKT-6 EKT-5 EKT-4 EKT-3
KEY 'B' (IN A LOCKED & SEALED RED BOX)
IN GATE LODGE
SBK'R' SBK'Q' SBK'P'
KEY 'N' (IN A LOCKED & SEALED RED BOX)
TO SM's PANEL (HN/EAST)
DN IBS DIST
DN IBS INN DIST
DN IB SIG 30(HN) CUM DN DIST OF LC AT KM. 771.658
30
HN-DN.IBS HN
30T
NGP(TLD - 10.9KM)
DN ADV STR. HN
28
DN MAIN →
DDBPAC DN.IBS/HN-BYT
URBPAC
BYT-UP IBS/BYT
UP IBS/BYT-HN
29T
29
UP IBS OF BYT
UP IBS IN DIST
TO SM (BYT WEST PANEL)
GATE SIG. Km-771.658 CUM DN G/INN. DIST
DN GATE SIG. CUM DN DIST OF LC GATE AT Km: 769.881(NEW)
GS-6
GS-8
DN MID INN DIST
DN MID GATE SIG. CUM DN MID DIST OF LC GATE AT KM:769.881(NEW)
UP IBS DIST
RS(N)
RS(S)
GL
DN G/INN. DIST
DN M/G/INN. DIST
GS-11
UP M/G/IN DIST
GS-9
UP G/IN DIST OF GATE AT KM;771.658(NEW)
DN GATE SIG CUM DN DIST OF BYT
GS-2
GS-4
DN MID GATE SIG. Km-768.517 CUM DN MID DIST OF BYT
GS-7
GS-5
HWH
MD LINE →
← UP MAIN
← MID LINE →
DN MID ADV STR. HN
26
UP MID INN DIST
UP MID DIST
UP HOME SIG. OF HN
UP INN DIST
UP DIST
'C' CLASS LC GATE(M) AT KM: 774/13-15(OLD) LC NO.-389
'B' CLASS LC GATE(MANNED) AT KM: 770/7(OLD) LC NO.-387 (MOTOR OPERATED)
(SLIDING BARRIER PROVIDED)
'C' CLASS LC GATE(MANNED) AT KM: 768.517 (OLD) LC NO.-386
(SLIDING BARRIER PROVIDED)

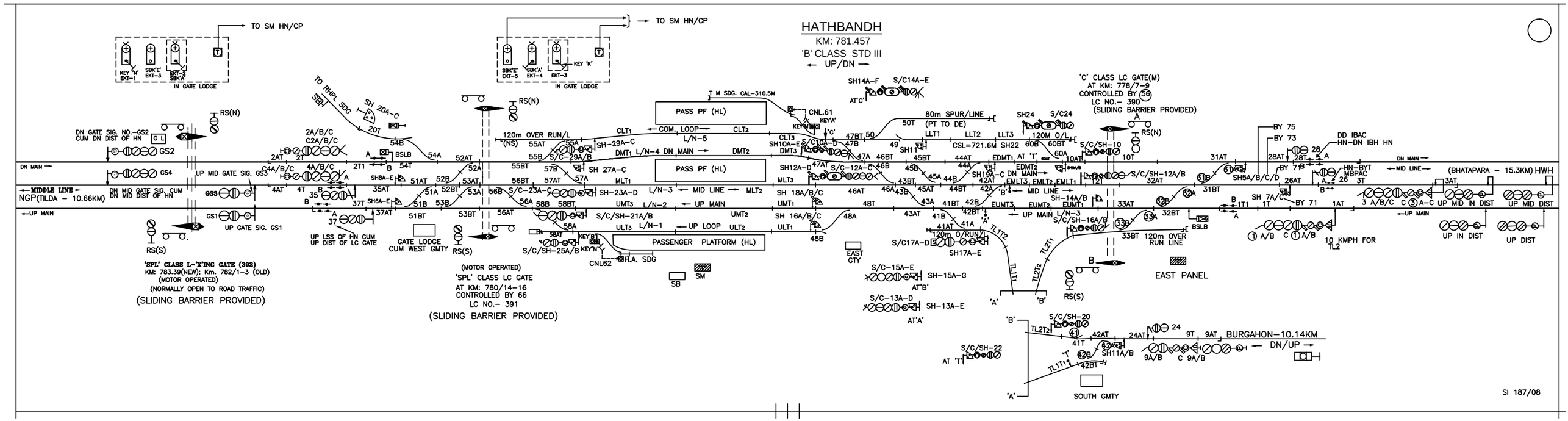
HATHBANDH
KM: 781.457
'B' CLASS STD III
← UP/DN →
TO SM HN/CP
IN GATE LODGE
TO RHPL SDG
SH 20A-C
RS(N)
RS(S)
DN GATE SIG. NO.-GS2
CUM DN DIST OF HN
GS2
GS4
GS3
GS1
UP MID GATE SIG. GS3
DN MID GATE SIG. CUM
DN MID DIST OF HN
UP GATE SIG. GS1
UP LSS OF HN CUM
UP DIST OF LC GATE
GATE LODGE
CUM WEST GMTY
'SPL' CLASS L-'X'ING GATE (392)
KM: 783.39(NEW); Km. 782/1-3 (OLD)
(MOTOR OPERATED)
(NORMALLY OPEN TO ROAD TRAFFIC)
(SLIDING BARRIER PROVIDED)
(MOTOR OPERATED)
'SPL' CLASS LC GATE
AT KM: 780/14-16
CONTROLLED BY 66
LC NO.- 391
(SLIDING BARRIER PROVIDED)
MIDDLE LINE
NGP(TILDA - 10.66KM)
DN MAIN
UP MAIN
PASS PF (HL)
PASSENGER PLATFORM (HL)
COM. LOOP
L/N-5
DN MAIN
MID LINE
UP MAIN
UP LOOP
L/N-4
L/N-3
L/N-2
L/N-1
120m OVER RUN/L
(NS)
CNL.61
CNL62
H.A. SDG
SB
SM
EAST GTY
EAST PANEL
SOUTH GMTY
80m SPUR/LINE
(PT TO DE)
CSL=721.6M
120m O/L
120m O/RUN/L
120m OVER RUN LINE
'C' CLASS LC GATE(M)
AT KM: 778/7-9
CONTROLLED BY 56
LC NO.- 390
(SLIDING BARRIER PROVIDED)
BSLB
BY 75
BY 73
BY 71
DD IBAC
HN-DN IBH HN
HN-BYT
MBPAC
(BHATAPARA - 15.3KM) HWH
UP MID IN DIST
UP MID DIST
UP IN DIST
UP DIST
10 KMPH FOR
TL2
BURGAHON-10.14KM
DN/UP
SI 187/08

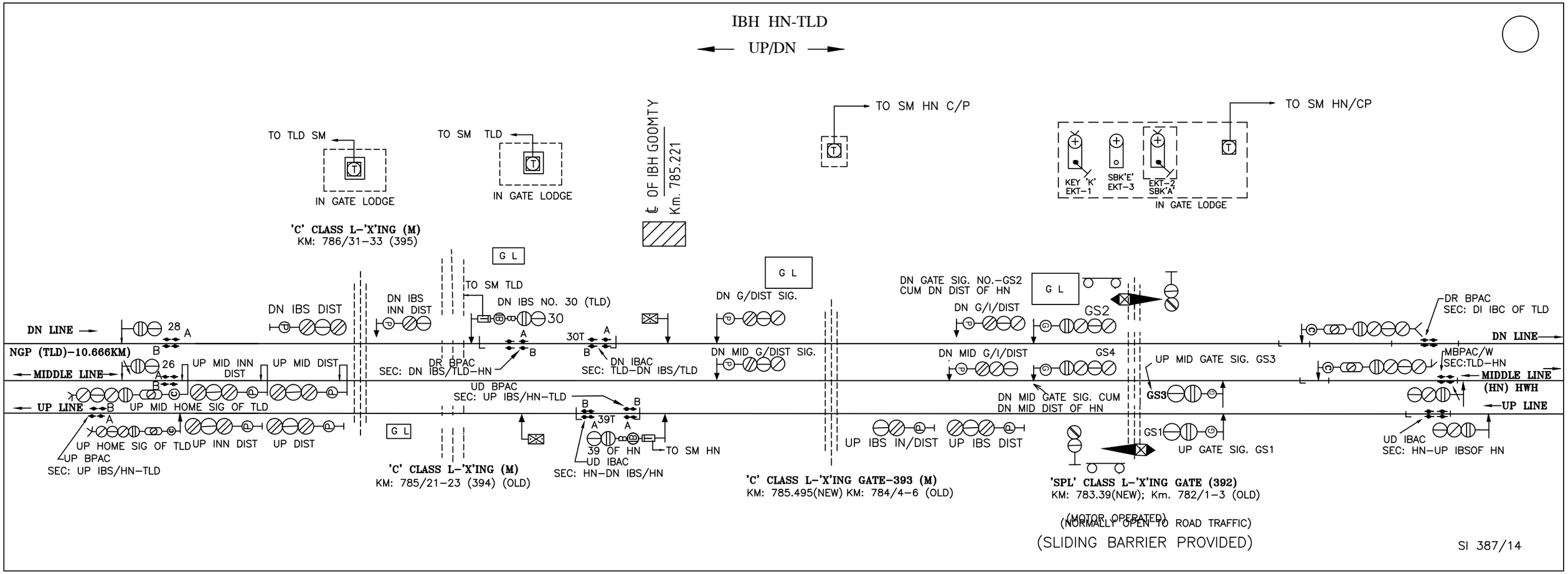
IBH HN-TLD
UP/DN
TO TLD SM
IN GATE LODGE
TO SM TLD
IN GATE LODGE
℄ OF IBH GOOMTY
Km. 785.221
TO SM HN C/P
TO SM HN/CP
KEY 'K' EKT-1
SBK'E' EKT-3
EKT-2 SBK'A'
IN GATE LODGE
'C' CLASS L-'X'ING (M)
KM: 786/31-33 (395)
G L
TO SM TLD
DN IBS INN DIST
DN IBS NO. 30 (TLD)
DN IBS DIST
DN G/DIST SIG.
DN GATE SIG. NO.-GS2
CUM DN DIST OF HN
DN G/I/DIST
GS2
DR BPAC
SEC: DI IBC OF TLD
DN LINE
NGP (TLD)-10.666KM)
MIDDLE LINE
UP LINE
UP MID INN DIST
UP MID DIST
UP MID HOME SIG OF TLD
DR BPAC
SEC: DN IBS/TLD-HN
DN IBAC
SEC: TLD-DN IBS/TLD
DN MID G/DIST SIG.
DN MID G/I/DIST
GS4
UP MID GATE SIG. GS3
MBPAC/W
SEC:TLD-HN
MIDDLE LINE
(HN) HWH
UP LINE
UD BPAC
SEC: UP IBS/HN-TLD
DN MID GATE SIG. CUM
DN MID DIST OF HN
GS3
GS1
UP GATE SIG. GS1
UP HOME SIG OF TLD
UP INN DIST
UP DIST
UP BPAC
SEC: UP IBS/HN-TLD
39 OF HN
UD IBAC
SEC: HN-DN IBS/HN
TO SM HN
UP IBS IN/DIST
UP IBS DIST
UD IBAC
SEC: HN-UP IBSOF HN
'C' CLASS L-'X'ING (M)
KM: 785/21-23 (394) (OLD)
'C' CLASS L-'X'ING GATE-393 (M)
KM: 785.495(NEW) KM: 784/4-6 (OLD)
'SPL' CLASS L-'X'ING GATE (392)
KM: 783.39(NEW); Km. 782/1-3 (OLD)
(MOTOR OPERATED)
(NORMALLY OPEN TO ROAD TRAFFIC)
(SLIDING BARRIER PROVIDED)
SI 387/14

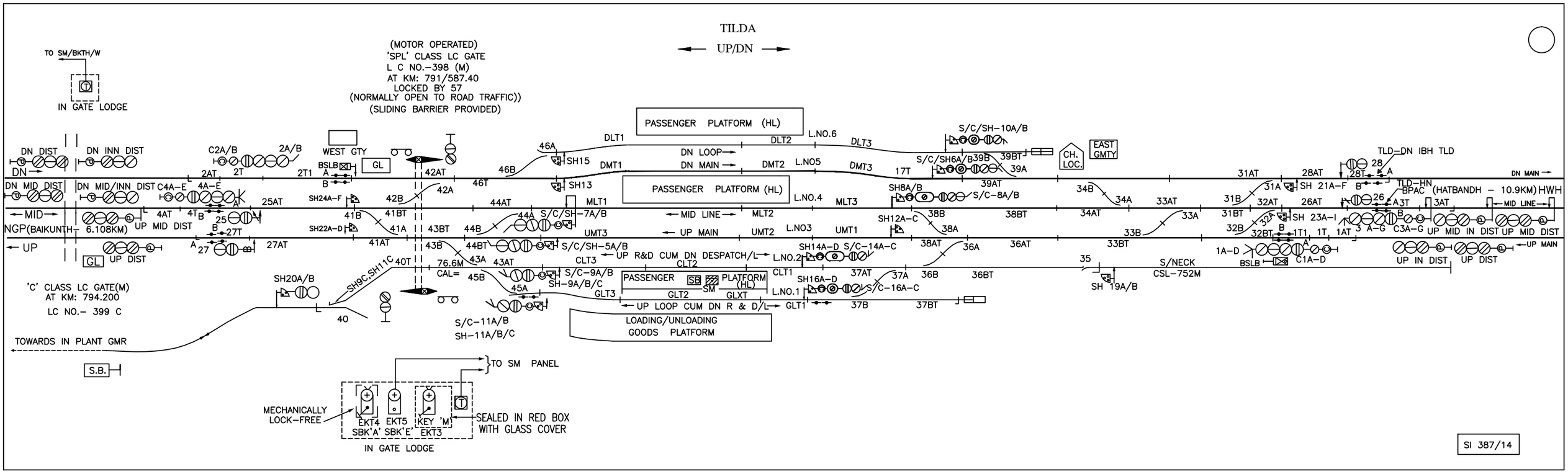
TILDA
UP/DN
TO SM/BKTH/W
IN GATE LODGE
(MOTOR OPERATED)
'SPL' CLASS LC GATE
L C NO.–398 (M)
AT KM: 791/587.40
LOCKED BY 57
(NORMALLY OPEN TO ROAD TRAFFIC))
(SLIDING BARRIER PROVIDED)
PASSENGER PLATFORM (HL)
PASSENGER PLATFORM (HL)
DN DIST
DN INN DIST
DN MID DIST
DN MID/INN DIST
WEST GTY
GL
DN LOOP
DN MAIN
MID LINE
UP MAIN
UP R&D CUM DN DESPATCH/L
UP LOOP CUM DN R & D/L
CH. LOC.
EAST GMTY
TLD–DN IBH TLD
TLD–HN
BPAC (HATBANDH – 10.9KM) HWH
NGP(BAIKUNTH– 6.108KM)
UP MID DIST
UP DIST
UP IN DIST
UP MID IN DIST
UP MID DIST
S/NECK
CSL–752M
'C' CLASS LC GATE(M)
AT KM: 794.200
LC NO.– 399 C
TOWARDS IN PLANT GMR
S.B.
LOADING/UNLOADING
GOODS PLATFORM
TO SM PANEL
MECHANICALLY
LOCK–FREE
EKT4 EKT5 KEY 'M'
SBK'A' SBK'E' EKT3
SEALED IN RED BOX
WITH GLASS COVER
IN GATE LODGE
SI 387/14

BAIKUNTH

KM: 796.842(OLD)
KM: 798.231(NEW)
'B' CLASS STD III

← UP/DN →

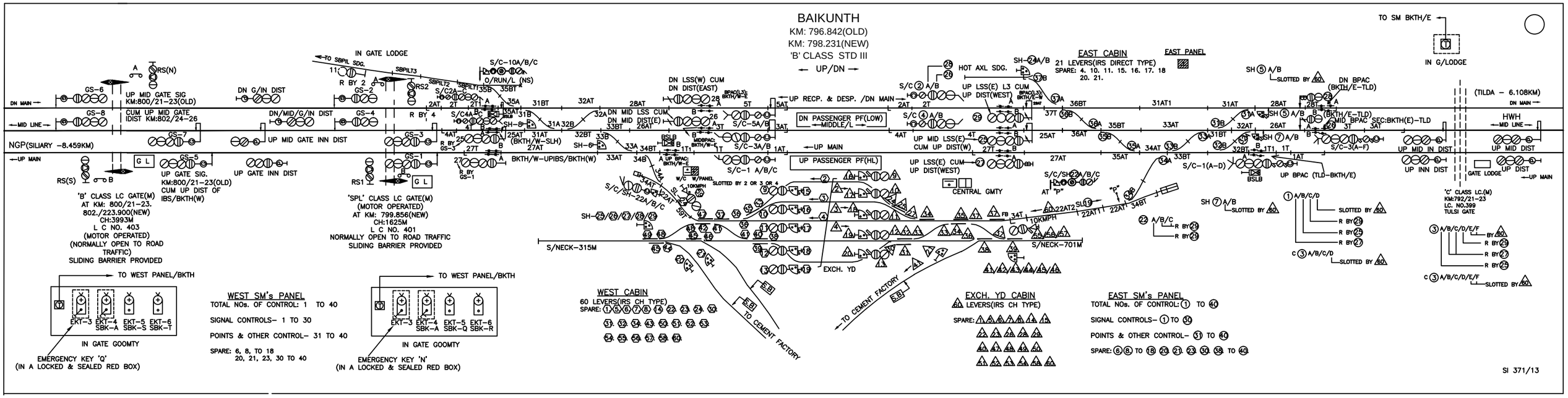

SI 371/13

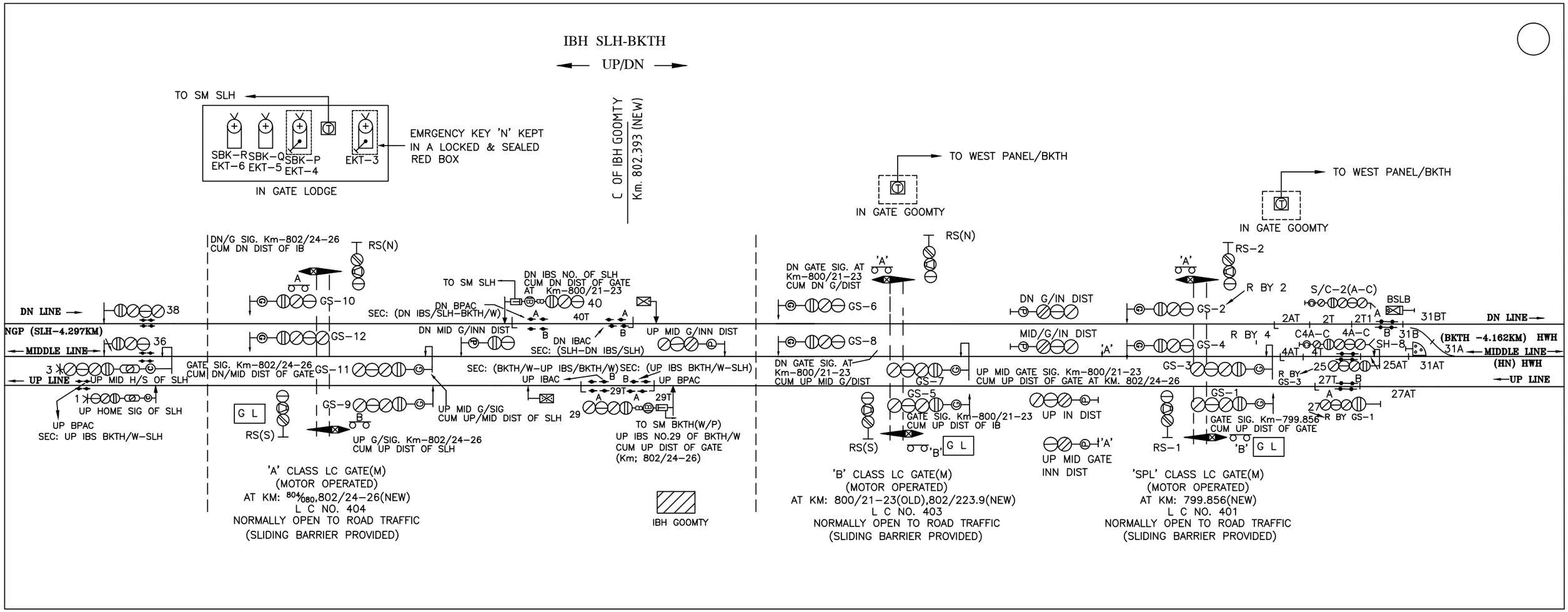
IBH SLH-BKTH
UP/DN
TO SM SLH
SBK-R EKT-6
SBK-Q EKT-5
SBK-P EKT-4
EKT-3
EMRGENCY KEY 'N' KEPT IN A LOCKED & SEALED RED BOX
IN GATE LODGE
℄ OF IBH GOOMTY
Km. 802.393 (NEW)
TO WEST PANEL/BKTH
IN GATE GOOMTY
TO WEST PANEL/BKTH
IN GATE GOOMTY
DN/G SIG. Km-802/24-26 CUM DN DIST OF IB
RS(N)
DN LINE
38
NGP (SLH-4.297KM)
MIDDLE LINE
36
UP LINE
UP MID H/S OF SLH
UP HOME SIG OF SLH
UP BPAC
SEC: UP IBS BKTH/W-SLH
GS-10
GS-12
GS-11
GS-9
GATE SIG. Km-802/24-26 CUM DN/MID DIST OF GATE
UP MID G/SIG CUM UP/MID DIST OF SLH
UP G/SIG. Km-802/24-26 CUM UP DIST OF SLH
G L
RS(S)
TO SM SLH
DN IBS NO. OF SLH CUM DN DIST OF GATE AT Km-800/21-23
40
40T
DN BPAC
SEC: (DN IBS/SLH-BKTH/W)
DN MID G/INN DIST
DN IBAC
SEC: (SLH-DN IBS/SLH)
UP MID G/INN DIST
SEC: (BKTH/W-UP IBS/BKTH/W)
SEC: (UP IBS BKTH/W-SLH)
UP IBAC
UP BPAC
29T
29
TO SM BKTH(W/P)
UP IBS NO.29 OF BKTH/W CUM UP DIST OF GATE (Km; 802/24-26)
'A' CLASS LC GATE(M)
(MOTOR OPERATED)
AT KM: 804/080,802/24-26(NEW)
L C NO. 404
NORMALLY OPEN TO ROAD TRAFFIC
(SLIDING BARRIER PROVIDED)
IBH GOOMTY
RS(N)
DN GATE SIG. AT Km-800/21-23 CUM DN G/DIST
GS-6
GS-8
DN GATE SIG. AT Km-800/21-23 CUM UP MID G/DIST
GS-7
GS-5
GATE SIG. Km-800/21-23 CUM UP DIST OF IB
RS(S)
G L
DN G/IN DIST
MID/G/IN DIST
UP MID GATE SIG. Km-800/21-23 CUM UP DIST OF GATE AT KM. 802/24-26
UP IN DIST
UP MID GATE INN DIST
'B' CLASS LC GATE(M)
(MOTOR OPERATED)
AT KM: 800/21-23(OLD),802/223.9(NEW)
L C NO. 403
NORMALLY OPEN TO ROAD TRAFFIC
(SLIDING BARRIER PROVIDED)
RS-2
R BY 2
GS-2
R BY 4
GS-4
GS-3
R BY GS-3
GS-1
RS-1
GATE SIG. Km-799.856 CUM UP DIST OF GATE
S/C-2(A-C)
BSLB
2AT
2T
2T1
31BT
C4A-C
4A-C
31B
SH-8
4AT
4T
25
25AT
31AT
27T
27AT
27
R BY GS-1
(BKTH -4.162KM) HWH
31A
MIDDLE LINE
(HN) HWH
UP LINE
'SPL' CLASS LC GATE(M)
(MOTOR OPERATED)
AT KM: 799.856(NEW)
L C NO. 401
NORMALLY OPEN TO ROAD TRAFFIC
(SLIDING BARRIER PROVIDED)

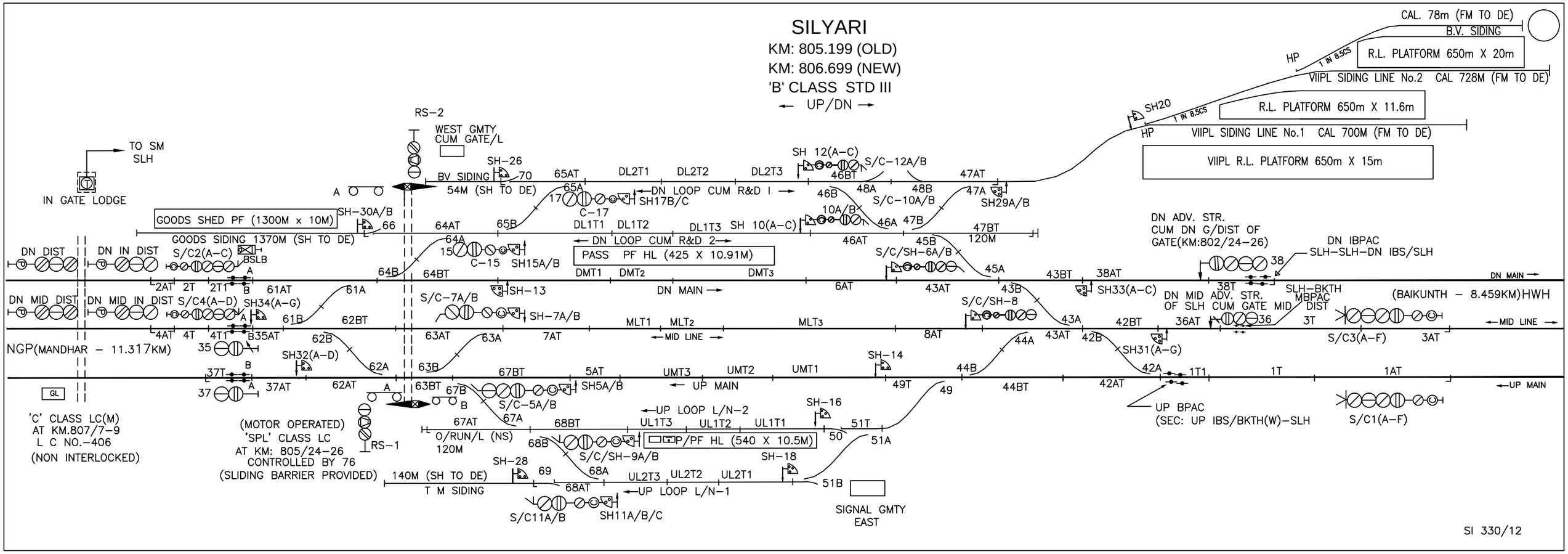
SILYARI
KM: 805.199 (OLD)
KM: 806.699 (NEW)
'B' CLASS STD III
← UP/DN →
CAL. 78m (FM TO DE)
B.V. SIDING
R.L. PLATFORM 650m X 20m
VIIPL SIDING LINE No.2 CAL 728M (FM TO DE)
R.L. PLATFORM 650m X 11.6m
VIIPL SIDING LINE No.1 CAL 700M (FM TO DE)
VIIPL R.L. PLATFORM 650m X 15m
HP
1 IN 8.5CS
SH20
RS-2
WEST GMTY
CUM GATE/L
TO SM
SLH
IN GATE LODGE
BV SIDING
54M (SH TO DE)
SH-26
70
65AT
DL2T1
DL2T2
DL2T3
SH 12(A-C)
S/C-12A/B
46BT
47AT
65A
17
C-17
SH17B/C
DN LOOP CUM R&D I
46B
48A
48B
S/C-10A/B
47A
SH29A/B
GOODS SHED PF (1300M x 10M)
SH-30A/B
66
64AT
65B
DL1T1
DL1T2
DL1T3
SH 10(A-C)
10A/B
46A
47B
47BT
120M
GOODS SIDING 1370M (SH TO DE)
64A
15
C-15
SH15A/B
DN LOOP CUM R&D 2
PASS PF HL (425 X 10.91M)
46AT
45B
S/C/SH-6A/B
45A
DN ADV. STR.
CUM DN G/DIST OF
GATE(KM:802/24-26)
38
DN IBPAC
SLH-SLH-DN IBS/SLH
DN DIST
DN IN DIST
S/C2(A-C)
BSLB
64B
64BT
DMT1
DMT2
DMT3
43BT
38AT
DN MAIN
2AT
2T
2T1
61AT
61A
SH-13
DN MAIN
6AT
43AT
43B
SH33(A-C)
38T
SLH-BKTH
MBPAC
DN MID DIST
DN MID IN DIST
S/C4(A-D)
SH34(A-G)
S/C-7A/B
SH-7A/B
S/C/SH-8
DN MID ADV. STR.
OF SLH CUM GATE MID
36AT
36
3T
(BAIKUNTH – 8.459KM)HWH
4AT
4T
4T1
35AT
61B
62BT
MLT1
MLT2
MLT3
MID LINE
43A
42BT
S/C3(A-F)
3AT
NGP(MANDHAR – 11.317KM)
35
62B
SH32(A-D)
63AT
63A
7AT
8AT
44A
42B
SH31(A-G)
37T
37
37AT
62AT
62A
63B
67BT
5AT
UMT3
UMT2
UMT1
SH-14
44B
42A
1T1
1T
1AT
GL
63BT
67B
SH5A/B
UP MAIN
49T
49
44BT
42AT
UP MAIN
S/C-5A/B
SH-16
UP BPAC
(SEC: UP IBS/BKTH(W)-SLH
'C' CLASS LC(M)
AT KM.807/7-9
L C NO.-406
(NON INTERLOCKED)
(MOTOR OPERATED)
'SPL' CLASS LC
AT KM: 805/24-26
CONTROLLED BY 76
(SLIDING BARRIER PROVIDED)
RS-1
67AT
67A
UP LOOP L/N-2
UL1T3
UL1T2
UL1T1
51T
O/RUN/L (NS)
120M
68BT
68B
P/PF HL (540 X 10.5M)
50
51A
S/C/SH-9A/B
SH-18
S/C1(A-F)
SH-28
69
68A
UL2T3
UL2T2
UL2T1
140M (SH TO DE)
T M SIDING
68AT
UP LOOP L/N-1
51B
S/C11A/B
SH11A/B/C
SIGNAL GMTY
EAST
SI 330/12

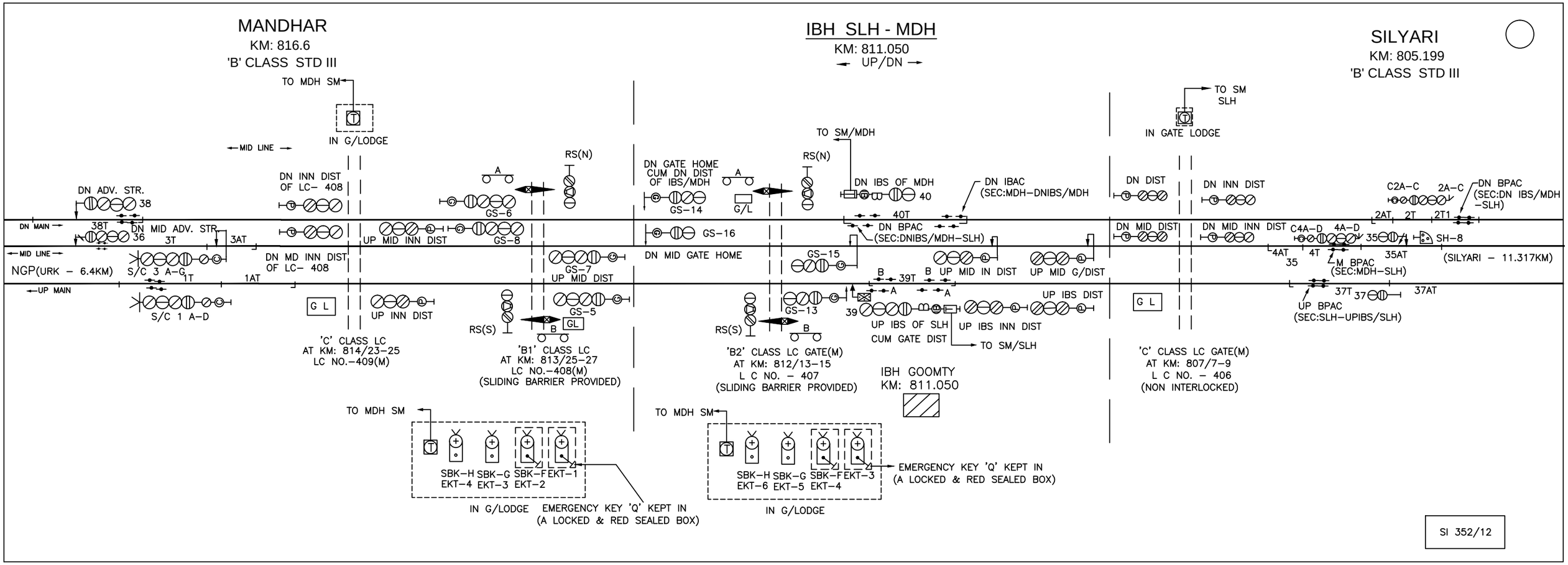
MANDHAR
KM: 816.6
'B' CLASS STD III
IBH SLH - MDH
KM: 811.050
UP/DN
SILYARI
KM: 805.199
'B' CLASS STD III
TO MDH SM
IN G/LODGE
MID LINE
DN ADV. STR.
38
DN MAIN
38T
DN MID ADV. STR
36
3T
3AT
DN INN DIST
OF LC– 408
GS–6
RS(N)
UP MID INN DIST
GS–8
DN MID INN DIST
OF LC– 408
NGP(URK – 6.4KM)
S/C 3 A–G
1T
1AT
S/C 1 A–D
UP MAIN
G L
UP INN DIST
'C' CLASS LC
AT KM: 814/23–25
LC NO.–409(M)
RS(S)
GS–5
GS–7
UP MID DIST
'B1' CLASS LC
AT KM: 813/25–27
LC NO.–408(M)
(SLIDING BARRIER PROVIDED)
DN GATE HOME
CUM DN DIST
OF IBS/MDH
GS–14
G/L
GS–16
DN MID GATE HOME
GS–15
GS–13
'B2' CLASS LC GATE(M)
AT KM: 812/13–15
L C NO. – 407
(SLIDING BARRIER PROVIDED)
TO SM/MDH
DN IBS OF MDH
40
40T
DN IBAC
(SEC:MDH–DNIBS/MDH
DN BPAC
(SEC:DNIBS/MDH–SLH)
39T
39
UP MID IN DIST
UP MID G/DIST
UP IBS OF SLH
CUM GATE DIST
UP IBS INN DIST
TO SM/SLH
UP IBS DIST
IBH GOOMTY
KM: 811.050
TO SM
SLH
IN GATE LODGE
DN DIST
DN MID DIST
'C' CLASS LC GATE(M)
AT KM: 807/7–9
L C NO. – 406
(NON INTERLOCKED)
DN INN DIST
DN MID INN DIST
C2A–C
2A–C
DN BPAC
(SEC:DN IBS/MDH
–SLH)
2AT
2T
2T1
C4A–D
4A–D
35
SH–8
4AT
4T
35AT
M BPAC
(SEC:MDH–SLH)
(SILYARI – 11.317KM)
37T
37
37AT
UP BPAC
(SEC:SLH–UPIBS/SLH)
SBK–H
EKT–4
SBK–G
EKT–3
SBK–F
EKT–2
EKT–1
IN G/LODGE
EMERGENCY KEY 'Q' KEPT IN
(A LOCKED & RED SEALED BOX)
SBK–H
EKT–6
SBK–G
EKT–5
SBK–F
EKT–4
EKT–3
IN G/LODGE
EMERGENCY KEY 'Q' KEPT IN
(A LOCKED & RED SEALED BOX)
SI 352/12

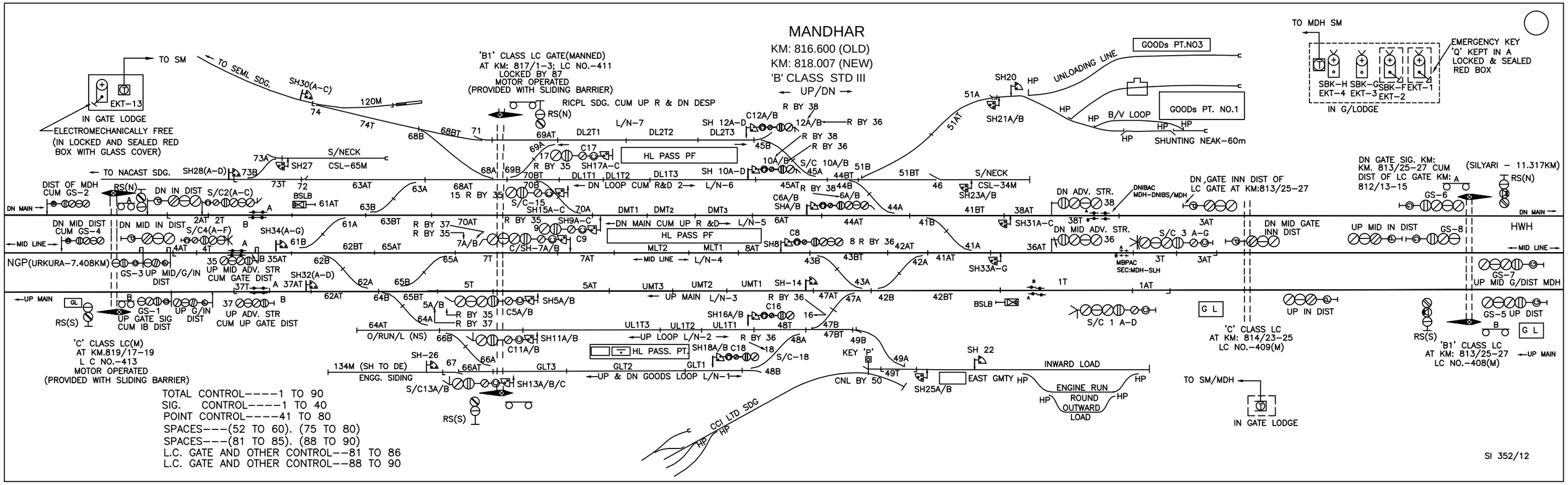
MANDHAR
KM: 816.600 (OLD)
KM: 818.007 (NEW)
'B' CLASS STD III
← UP/DN →
TO SM
EKT-13
IN GATE LODGE
ELECTROMECHANICALLY FREE
(IN LOCKED AND SEALED RED
BOX WITH GLASS COVER)
TO SEML SDG.
SH30(A-C)
'B1' CLASS LC GATE(MANNED)
AT KM: 817/1-3; LC NO.-411
LOCKED BY 87
MOTOR OPERATED
(PROVIDED WITH SLIDING BARRIER)
RICPL SDG. CUM UP R & DN DESP
RS(N)
HL PASS PF
HL PASS. PT
DN LOOP CUM R&D 2
DN MAIN CUM UP R &D
UP LOOP L/N-2
UP & DN GOODS LOOP L/N-1
UNLOADING LINE
GOODs PT.NO3
GOODs PT. NO.1
B/V LOOP
SHUNTING NEAK-60m
TO MDH SM
SBK-H SBK-G SBK-F EKT-1
EKT-4 EKT-3 EKT-2
IN G/LODGE
EMERGENCY KEY
'Q' KEPT IN A
LOCKED & SEALED
RED BOX
DN GATE SIG. KM:
KM. 813/25-27 CUM
DIST OF LC GATE KM:
812/13-15
(SILYARI - 11.317KM)
DN GATE INN DIST OF
LC GATE AT KM:813/25-27
DNIBAC
MDH-DNIBS/MDH
DN ADV. STR.
DN MID ADV. STR.
MBPAC
SEC:MDH-SLH
DN MID GATE
INN DIST
UP MID IN DIST
HWH
DIST OF MDH
CUM GS-2
DN IN DIST
DN MID DIST
CUM GS-4
DN MID IN DIST
DN MAIN
MID LINE
NGP(URKURA-7.408KM)
GS-3 UP MID/G/IN
DIST
UP MID ADV. STR
CUM GATE DIST
UP ADV. STR
CUM UP GATE DIST
UP MID G/DIST MDH
UP MAIN
GS-1
UP GATE SIG
CUM IB DIST
UP G/IN
DIST
'C' CLASS LC(M)
AT KM.819/17-19
L C NO.-413
MOTOR OPERATED
(PROVIDED WITH SLIDING BARRIER)
O/RUN/L (NS)
134M (SH TO DE)
ENGG. SIDING
CCI LTD SDG
KEY 'P'
CNL BY 50
EAST GMTY
INWARD LOAD
ENGINE RUN
ROUND
OUTWARD
LOAD
TO SM/MDH
IN GATE LODGE
UP IN DIST
'C' CLASS LC
AT KM: 814/23-25
LC NO.-409(M)
GS-5 UP DIST
'B1' CLASS LC
AT KM: 813/25-27
LC NO.-408(M)
TOTAL CONTROL----1 TO 90
SIG. CONTROL----1 TO 40
POINT CONTROL----41 TO 80
SPACES---(52 TO 60). (75 TO 80)
SPACES---(81 TO 85). (88 TO 90)
L.C. GATE AND OTHER CONTROL--81 TO 86
L.C. GATE AND OTHER CONTROL--88 TO 90
SI 352/12

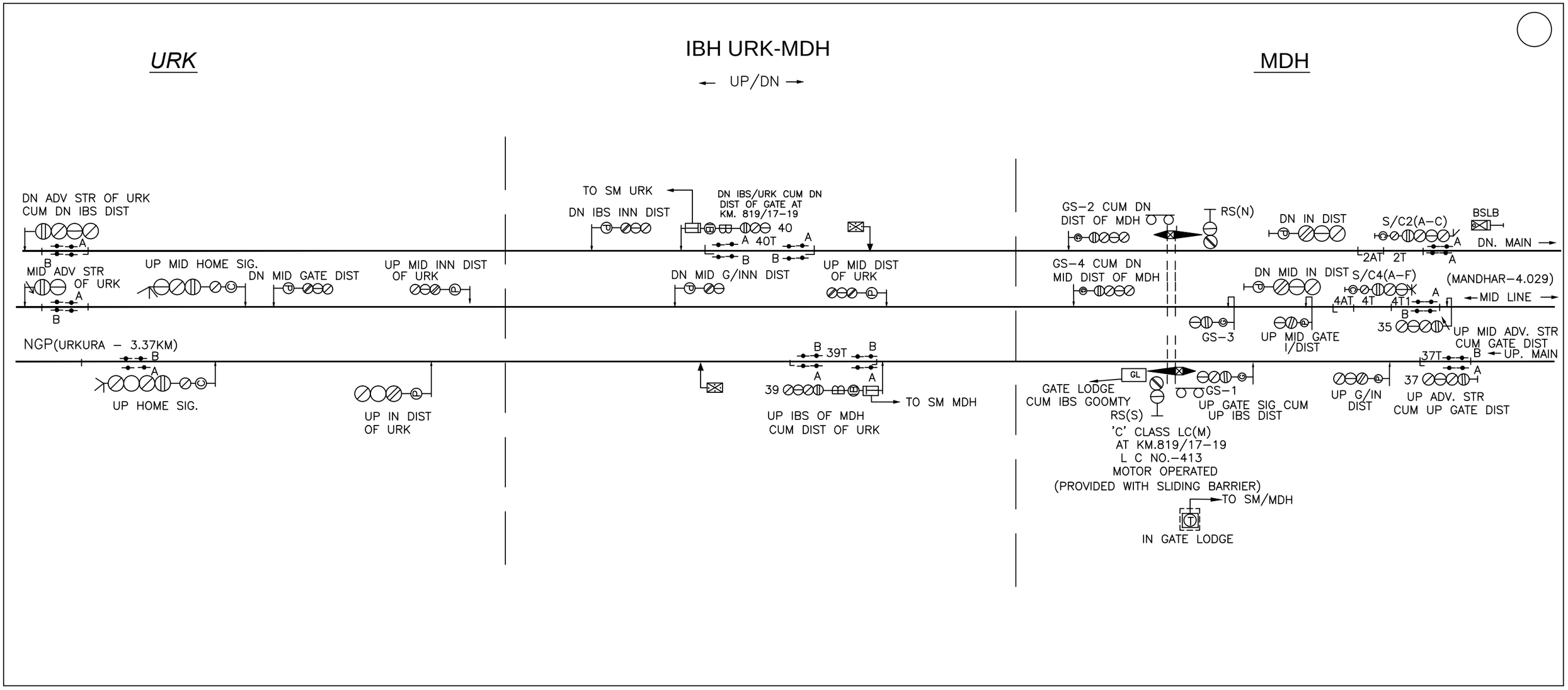
URK
IBH URK-MDH
← UP/DN →
MDH
DN ADV STR OF URK
CUM DN IBS DIST
MID ADV STR
OF URK
UP MID HOME SIG.
DN MID GATE DIST
UP MID INN DIST
OF URK
TO SM URK
DN IBS INN DIST
DN IBS/URK CUM DN
DIST OF GATE AT
KM. 819/17-19
40
40T
DN MID G/INN DIST
UP MID DIST
OF URK
GS-2 CUM DN
DIST OF MDH
RS(N)
DN IN DIST
S/C2(A-C)
BSLB
DN. MAIN →
2AT 2T
GS-4 CUM DN
MID DIST OF MDH
DN MID IN DIST
S/C4(A-F)
(MANDHAR-4.029)
← MID LINE →
4AT 4T 4T1
GS-3
UP MID GATE
I/DIST
35
UP MID ADV. STR
CUM GATE DIST
← UP. MAIN
37T
37
UP ADV. STR
CUM UP GATE DIST
NGP(URKURA - 3.37KM)
UP HOME SIG.
UP IN DIST
OF URK
39T
39
UP IBS OF MDH
CUM DIST OF URK
TO SM MDH
GL
GATE LODGE
CUM IBS GOOMTY
RS(S)
GS-1
UP GATE SIG CUM
UP IBS DIST
UP G/IN
DIST
'C' CLASS LC(M)
AT KM.819/17-19
L C NO.-413
MOTOR OPERATED
(PROVIDED WITH SLIDING BARRIER)
TO SM/MDH
IN GATE LODGE

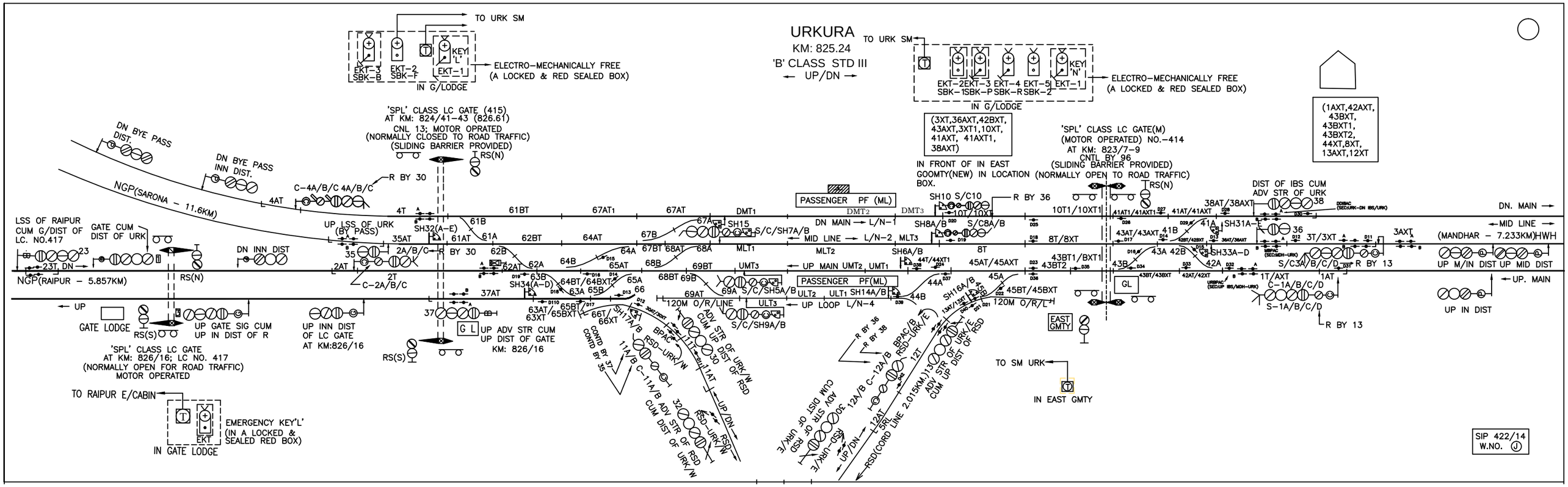
URKURA
KM: 825.24
'B' CLASS STD III
← UP/DN →
TO URK SM
EKT-3 SBK-B
EKT-2 SBK-F
KEY 'L'
EKT-1
IN G/LODGE
ELECTRO-MECHANICALLY FREE (A LOCKED & RED SEALED BOX)
EKT-2 SBK-1
EKT-3 SBK-P
EKT-4 SBK-R
EKT-5 SBK-2
KEY 'N'
(3XT,36AXT,42BXT, 43AXT,3XT1,10XT, 41AXT, 41AXT1, 38AXT)
IN FRONT OF IN EAST GOOMTY(NEW) IN LOCATION BOX.
(1AXT,42AXT, 43BXT, 43BXT1, 43BXT2, 44XT,8XT, 13AXT,12XT)
'SPL' CLASS LC GATE (415) AT KM: 824/41-43 (826.61)
CNL 13; MOTOR OPRATED (NORMALLY CLOSED TO ROAD TRAFFIC) (SLIDING BARRIER PROVIDED)
'SPL' CLASS LC GATE(M) (MOTOR OPERATED) NO.-414 AT KM: 823/7-9
CNTL BY 96 (SLIDING BARRIER PROVIDED) (NORMALLY OPEN TO ROAD TRAFFIC)
DN BYE PASS DIST.
DN BYE PASS INN DIST.
NGP(SARONA - 11.6KM)
NGP(RAIPUR - 5.857KM)
LSS OF RAIPUR CUM G/DIST OF LC. NO.417
GATE CUM DIST OF URK
UP LSS OF URK (BY PASS)
DN INN DIST
PASSENGER PF (ML)
DN MAIN → L/N-1
MID LINE → L/N-2
UP MAIN UMT2
UP LOOP L/N-4
DIST OF IBS CUM ADV STR OF URK
DN. MAIN
MID LINE
(MANDHAR - 7.233KM)HWH
UP M/IN DIST UP MID DIST
UP. MAIN
UP IN DIST
GATE LODGE
UP GATE SIG CUM UP IN DIST OF R
'SPL' CLASS LC GATE AT KM: 826/16; LC NO. 417 (NORMALLY OPEN FOR ROAD TRAFFIC) MOTOR OPERATED
UP INN DIST OF LC GATE AT KM:826/16
UP ADV STR CUM UP DIST OF GATE KM: 826/16
TO RAIPUR E/CABIN
EMERGENCY KEY'L' (IN A LOCKED & SEALED RED BOX)
IN GATE LODGE
EAST GMTY
TO SM URK
IN EAST GMTY
SIP 422/14
W.NO. J

IBH BET URK-SZB(BYE PASS/L)

SARONA
KM: 834.6
'B' CLASS STD III

URKURA
KM: 823.0
'B' CLASS STD III

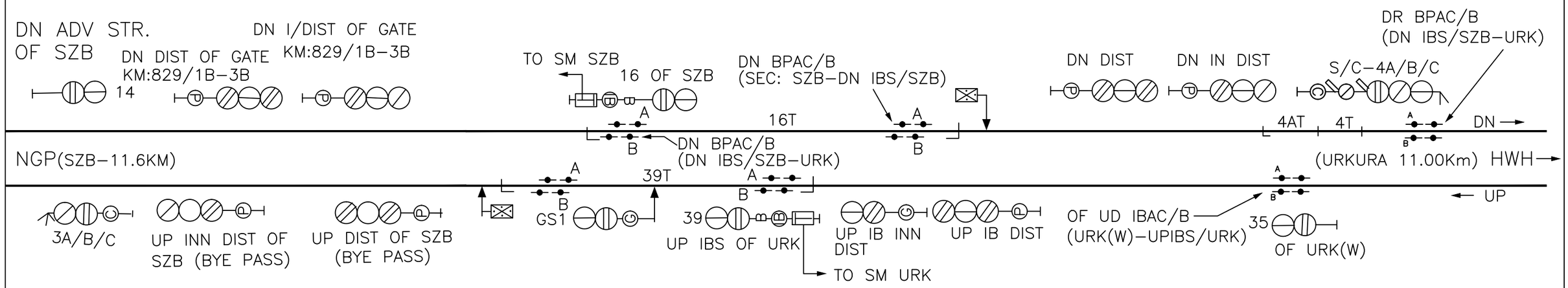

SIP 422/14

IBH BET URK-SZB(BYE PASS/L)

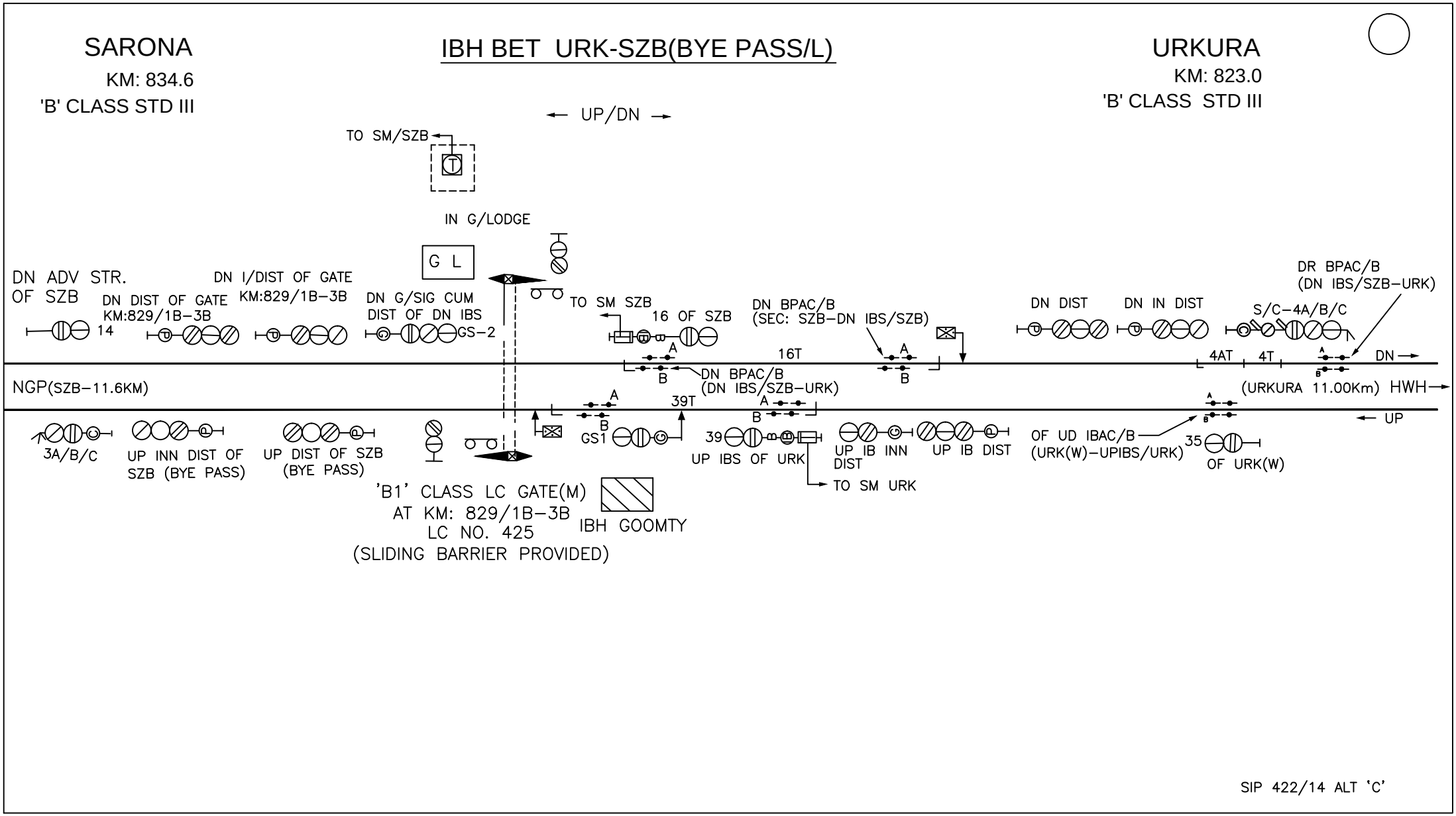

SIP 422/14 ALT 'C'

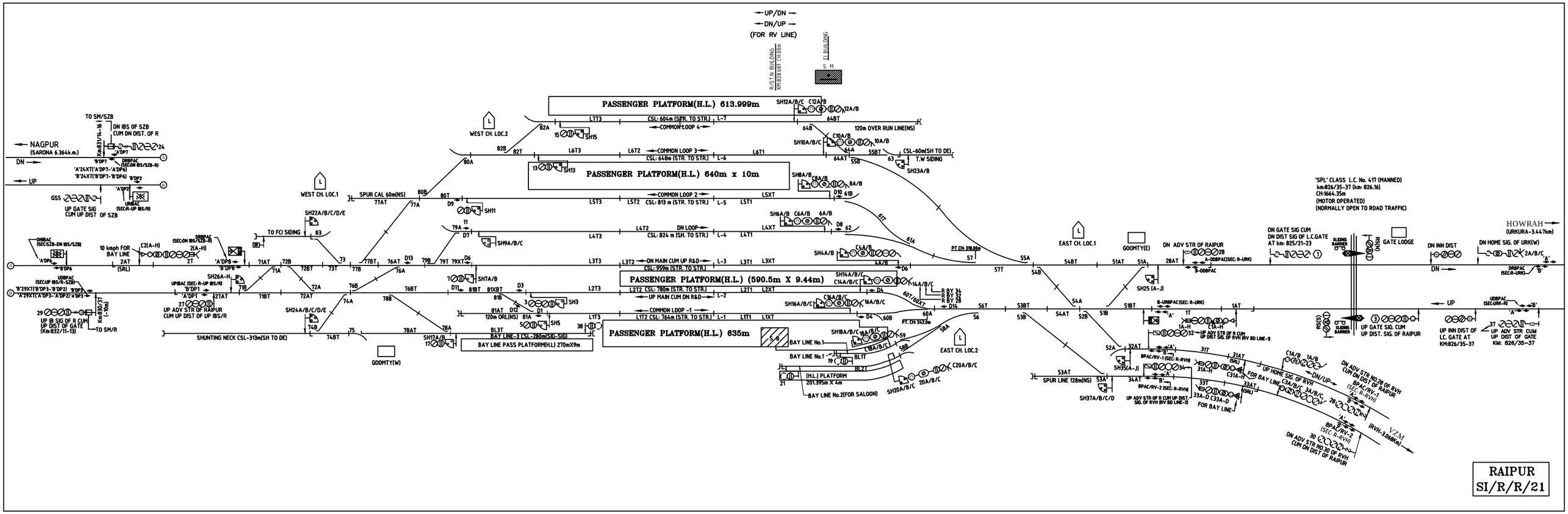
UP/DN
DN/UP
(FOR RV LINE)
PASSENGER PLATFORM(H.L.) 613.999m
PASSENGER PLATFORM(H.L.) 640m x 10m
PASSENGER PLATFORM(H.L.) (590.5m X 9.44m)
PASSENGER PLATFORM(H.L.) 635m
BAY LINE PASS PLATFORM(H.L) 270mX9m
NAGPUR
(SARONA 6.364k.m.)
DN
UP
TO SM/SZB
DN IBS OF SZB
CUM DN DIST. OF R
UP GATE SIG
CUM UP DIST OF SZB
WEST CH. LOC.2
WEST CH. LOC.1
SPUR CAL 60m(NS)
TO FCI SIDING
10 kmph FOR
BAY LINE
SHUNTING NECK CSL-313m(SH TO DE)
UP IB SIG OF R CUM
UP DIST OF GATE
(Km:832/11-13)
TO SM/R
UP ADV STR OF RAIPUR
CUM UP DIST OF UP IBS/R
GOOMTY(W)
CSL: 604m (STR. TO STR.)
COMMON LOOP 4
COMMON LOOP 3
CSL: 648m (STR. TO STR.)
COMMON LOOP 2
CSL: 813 m (STR. TO STR.)
DN LOOP
CSL: 824 m (SH. TO STR.)
DN MAIN CUM UP R&D
CSL: 959m (STR. TO STR.)
CSL: 780m (STR. TO STR.)
UP MAIN CUM DN R&D
COMMON LOOP -1
CSL: 764m (STR. TO STR.)
BAY LINE-3 (CSL-280m(SIG-SIG)
BAY LINE No.1
BAY LINE No.2(FOR SALOON)
(H.L.) PLATFORM
201.395m X 4m
120m OVER RUN LINE(NS)
CSL-60m(SH TO DE)
T.W SIDING
EAST CH. LOC.1
EAST CH. LOC.2
GOOMTY(E)
DN ADV STR OF RAIPUR
SPUR LINE 128m(NS)
FOR BAY LINE
UP HOME SIG. OF RVH
DN ADV STR NO.28 OF RVH
CUM DN DIST OF RAIPUR
DN ADV STR NO 30 OF RVH
CUM DN DIST OF RAIPUR
(RVH-3.068Km)
'SPL' CLASS L.C. No. 417 (MANNED)
km:826/35-37 (km: 826.16)
CH:1664.35m
(MOTOR OPERATED)
(NORMALLY OPEN TO ROAD TRAFFIC)
DN GATE SIG CUM
DN DIST SIG OF L.C.GATE
AT km: 825/21-23
GATE LODGE
DN INN DIST
DN HOME SIG. OF URK(W)
HOWRAH
(URKURA-3.447km)
UP GATE SIG. CUM
UP DIST. SIG. OF RAIPUR
UP INN DIST OF
L.C. GATE AT
KM:826/35-37
UP ADV STR CUM
UP DIST OF GATE
KM: 826/36-37
RAIPUR
SI/R/R/21

IBH BET R-SZB

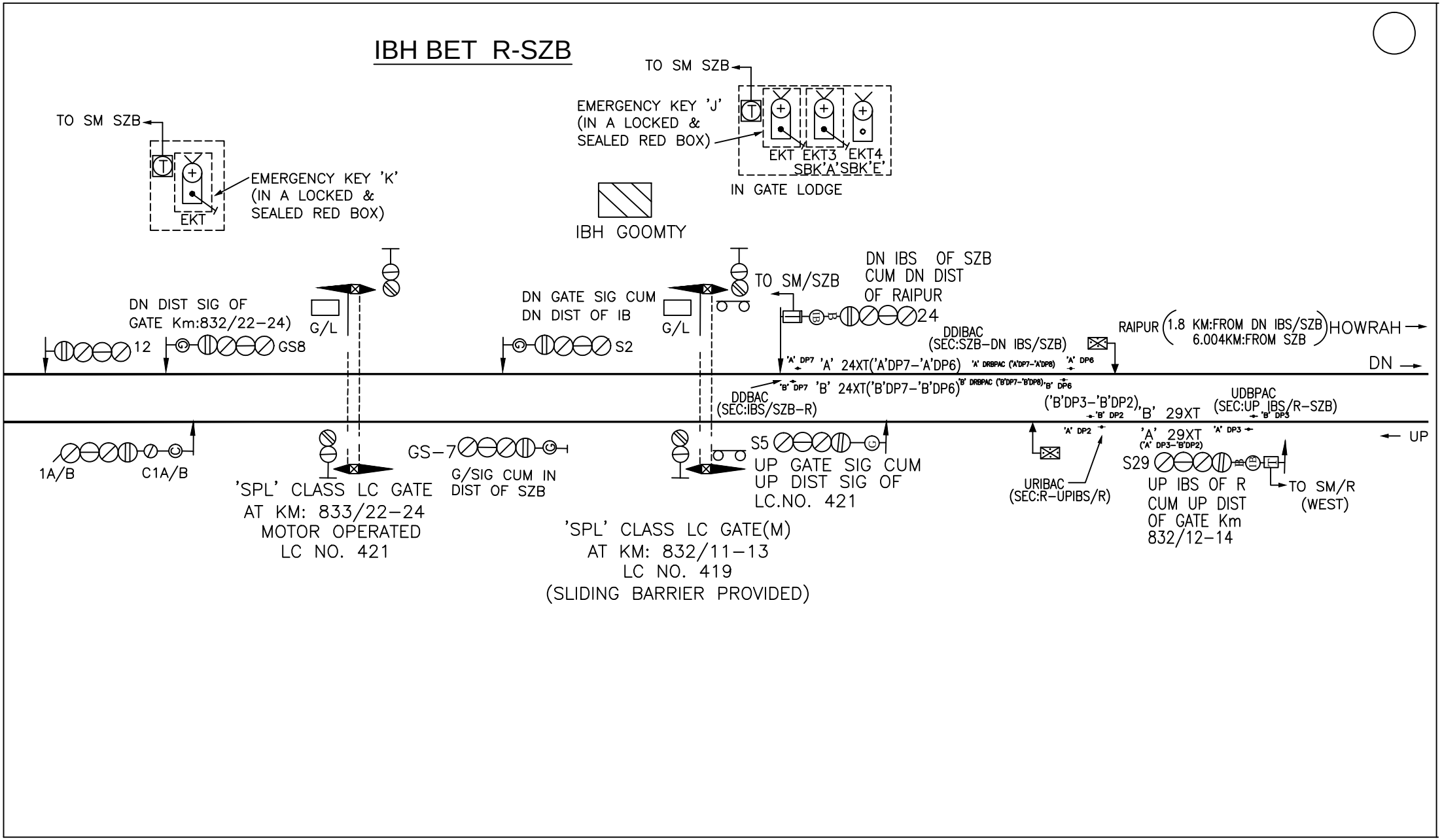
TO SM SZB
EMERGENCY KEY 'K'
(IN A LOCKED &
SEALED RED BOX)
EKT
TO SM SZB
EMERGENCY KEY 'J'
(IN A LOCKED &
SEALED RED BOX)
EKT EKT3 EKT4
SBK'A'SBK'E'
IN GATE LODGE
IBH GOOMTY
DN DIST SIG OF
GATE Km:832/22-24)
G/L
12
GS8
DN GATE SIG CUM
DN DIST OF IB
G/L
S2
TO SM/SZB
DN IBS OF SZB
CUM DN DIST
OF RAIPUR
24
DDIBAC
(SEC:SZB-DN IBS/SZB)
RAIPUR (1.8 KM:FROM DN IBS/SZB
6.004KM:FROM SZB) HOWRAH
DN
'A' DP7 'A' 24XT('A'DP7-'A'DP6) 'A' DRBPAC ('A'DP7-'A'DP8) 'A' DP6
'B' DP7 'B' 24XT('B'DP7-'B'DP6) 'B' DRBPAC ('B'DP7-'B'DP8) 'B' DP6
DDBAC
(SEC:IBS/SZB-R)
('B'DP3-'B'DP2), 'B' 29XT
UDBPAC
(SEC:UP IBS/R-SZB)
'B' DP2
'B' DP3
'A' DP2
'A' 29XT
('A' DP3-'B'DP2)
'A' DP3
UP
1A/B
C1A/B
'SPL' CLASS LC GATE
AT KM: 833/22-24
MOTOR OPERATED
LC NO. 421
GS-7
G/SIG CUM IN
DIST OF SZB
S5
UP GATE SIG CUM
UP DIST SIG OF
LC.NO. 421
'SPL' CLASS LC GATE(M)
AT KM: 832/11-13
LC NO. 419
(SLIDING BARRIER PROVIDED)
URIBAC
(SEC:R-UPIBS/R)
S29
UP IBS OF R
CUM UP DIST
OF GATE Km
832/12-14
TO SM/R
(WEST)

IBH BET R-SZB

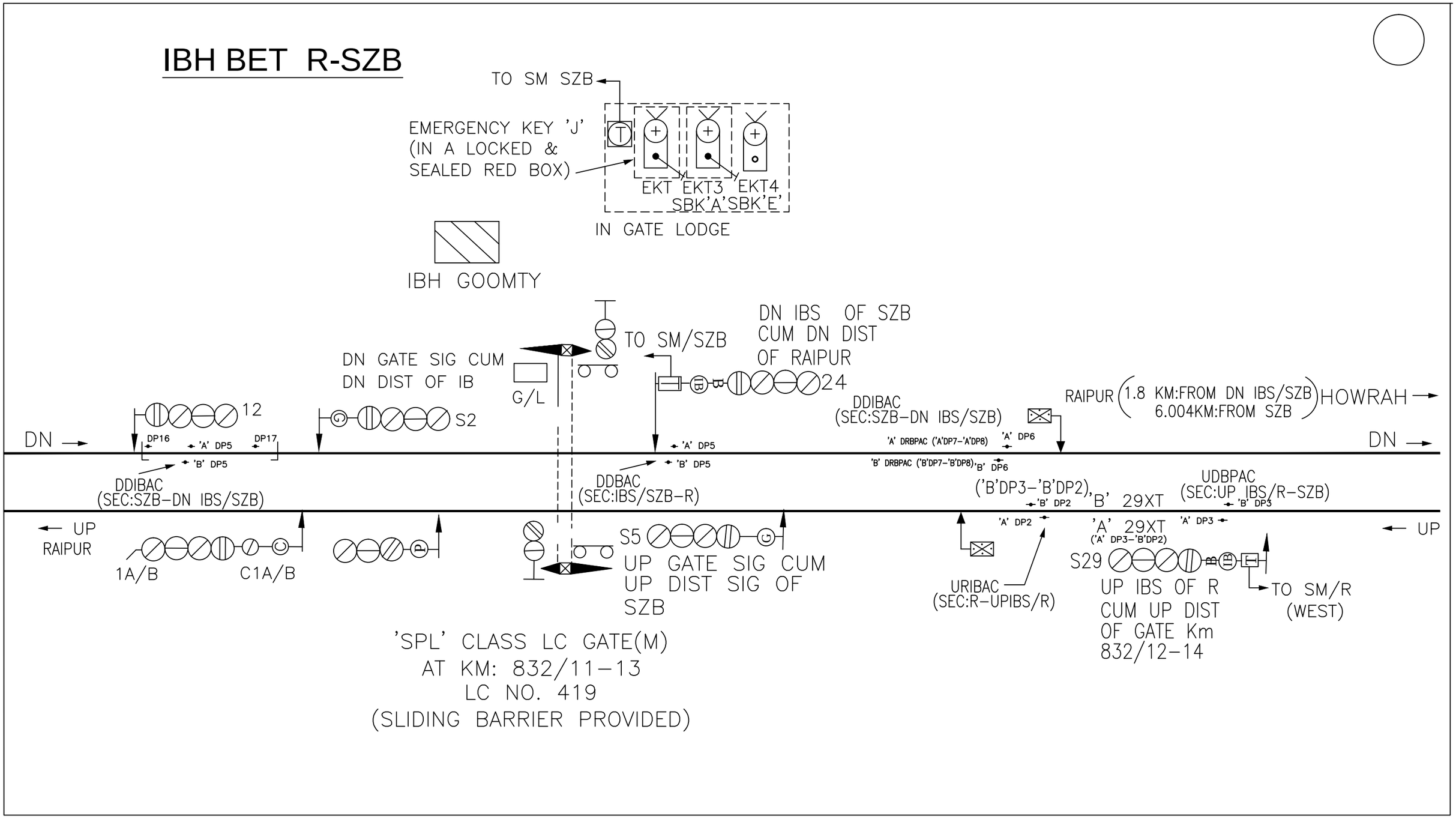
TO SM SZB
EMERGENCY KEY 'J'
(IN A LOCKED &
SEALED RED BOX)
EKT EKT3 EKT4
SBK'A'SBK'E'
IN GATE LODGE
IBH GOOMTY
DN IBS OF SZB
CUM DN DIST
OF RAIPUR
TO SM/SZB
DN GATE SIG CUM
DN DIST OF IB
G/L
24
12
S2
DDIBAC
(SEC:SZB-DN IBS/SZB)
RAIPUR (1.8 KM:FROM DN IBS/SZB
6.004KM:FROM SZB) HOWRAH
DN
DP16
'A' DP5
DP17
'B' DP5
'A' DRBPAC ('A'DP7-'A'DP8)
'A' DP6
'B' DRBPAC ('B'DP7-'B'DP8)
'B' DP6
DDBAC
(SEC:IBS/SZB-R)
('B'DP3-'B'DP2),
'B' 29XT
UDBPAC
(SEC:UP IBS/R-SZB)
'B' DP2
'B' DP3
'A' DP2
'A' 29XT
('A' DP3-'B'DP2)
'A' DP3
UP
RAIPUR
1A/B
C1A/B
S5
UP GATE SIG CUM
UP DIST SIG OF
SZB
URIBAC
(SEC:R-UPIBS/R)
S29
UP IBS OF R
CUM UP DIST
OF GATE Km
832/12-14
TO SM/R
(WEST)
'SPL' CLASS LC GATE(M)
AT KM: 832/11-13
LC NO. 419
(SLIDING BARRIER PROVIDED)

SARONA

KM: 834.6

'B' CLASS STD III

←UP/DN→

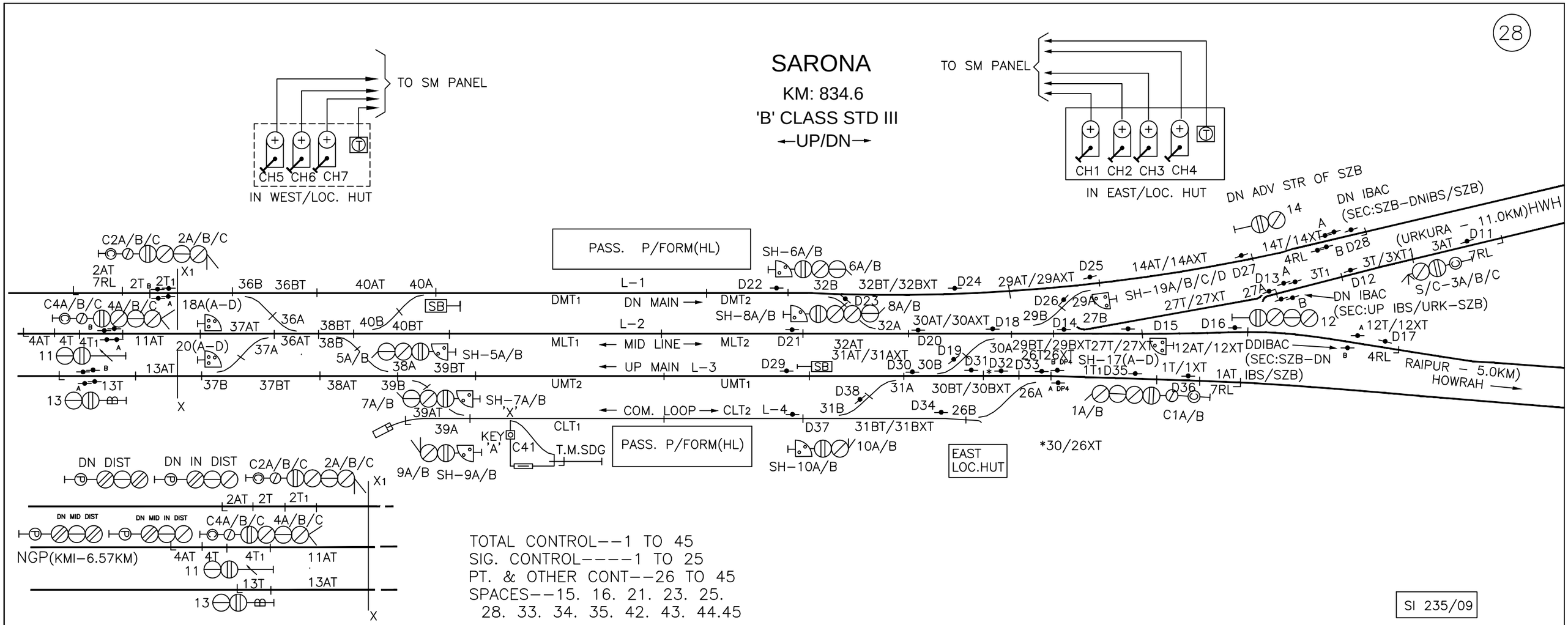

TOTAL CONTROL--1 TO 45
SIG. CONTROL----1 TO 25
PT. & OTHER CONT--26 TO 45
SPACES--15. 16. 21. 23. 25.
28. 33. 34. 35. 42. 43. 44.45

SI 235/09

KUMHARI

KM: 841.0

'B' CLASS STD III

← UP/DN →

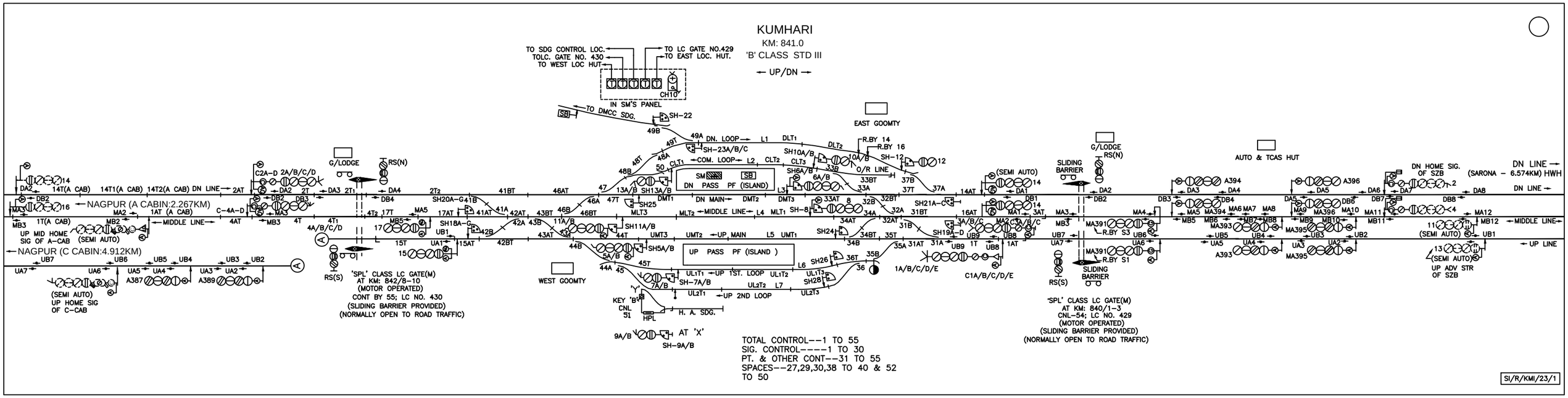

TOTAL CONTROL--1 TO 55
SIG. CONTROL----1 TO 30
PT. & OTHER CONT--31 TO 55
SPACES--27,29,30,38 TO 40 & 52 TO 50

SI/R/KMI/23/1

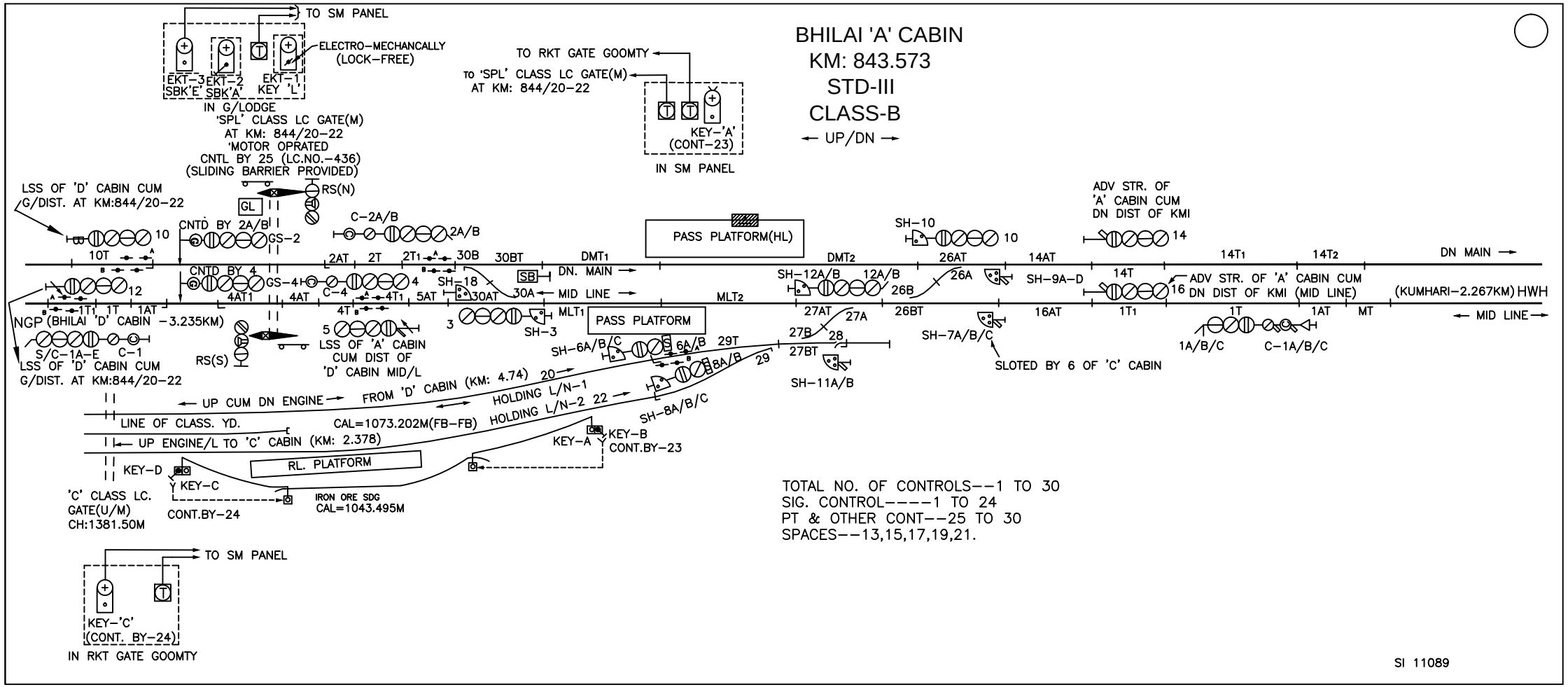
BHILAI 'A' CABIN
KM: 843.573
STD-III
CLASS-B
← UP/DN →
TO SM PANEL
ELECTRO-MECHANCALLY (LOCK-FREE)
EKT-3 SBK'E'
EKT-2 SBK'A'
EKT-1 KEY 'L'
IN G/LODGE
'SPL' CLASS LC GATE(M) AT KM: 844/20-22
'MOTOR OPRATED CNTL BY 25 (LC.NO.-436) (SLIDING BARRIER PROVIDED)
TO RKT GATE GOOMTY
TO 'SPL' CLASS LC GATE(M) AT KM: 844/20-22
KEY-'A' (CONT-23)
IN SM PANEL
LSS OF 'D' CABIN CUM G/DIST. AT KM:844/20-22
RS(N)
GL
CNTD BY 2A/B
GS-2
C-2A/B
2A/B
PASS PLATFORM(HL)
SH-10
ADV STR. OF 'A' CABIN CUM DN DIST OF KMI
10T
2AT
2T
2T1
30B
30BT
DMT1
DMT2
26AT
14AT
14T1
14T2
DN MAIN →
CNTD BY 4
GS-4
C-4
4
SH-18
SB
DN. MAIN →
SH-12A/B
12A/B
26A
SH-9A-D
14T
ADV STR. OF 'A' CABIN CUM DN DIST OF KMI (MID LINE)
12
4AT1
4AT
4T1
5AT
30AT
30A
MID LINE →
MLT2
26B
16
(KUMHARI-2.267KM) HWH
1T1
1T
1AT
NGP (BHILAI 'D' CABIN -3.235KM)
4T
5
3
SH-3
MLT1
PASS PLATFORM
27AT
27A
26BT
16AT
1T1
1T
1AT
MT
← MID LINE
S/C-1A-E
C-1
RS(S)
LSS OF 'A' CABIN CUM DIST OF 'D' CABIN MID/L
SH-6A/B/C
6A/B
29T
27B
28
27BT
SH-7A/B/C
1A/B/C
C-1A/B/C
SLOTED BY 6 OF 'C' CABIN
LSS OF 'D' CABIN CUM G/DIST. AT KM:844/20-22
8A/B
29
SH-11A/B
← UP CUM DN ENGINE →
FROM 'D' CABIN (KM: 4.74)
20
HOLDING L/N-1
HOLDING L/N-2
22
SH-8A/B/C
LINE OF CLASS. YD.
CAL=1073.202M(FB-FB)
← UP ENGINE/L TO 'C' CABIN (KM: 2.378)
KEY-A
KEY-B
CONT.BY-23
RL. PLATFORM
KEY-D
KEY-C
'C' CLASS LC. GATE(U/M) CH:1381.50M
CONT.BY-24
IRON ORE SDG CAL=1043.495M
TO SM PANEL
KEY-'C' (CONT. BY-24)
IN RKT GATE GOOMTY
TOTAL NO. OF CONTROLS--1 TO 30
SIG. CONTROL----1 TO 24
PT & OTHER CONT--25 TO 30
SPACES--13,15,17,19,21.
SI 11089

BHILAI 'A' CABIN
KM: 843.573
STD-III
CLASS-SPL
← UP/DN →

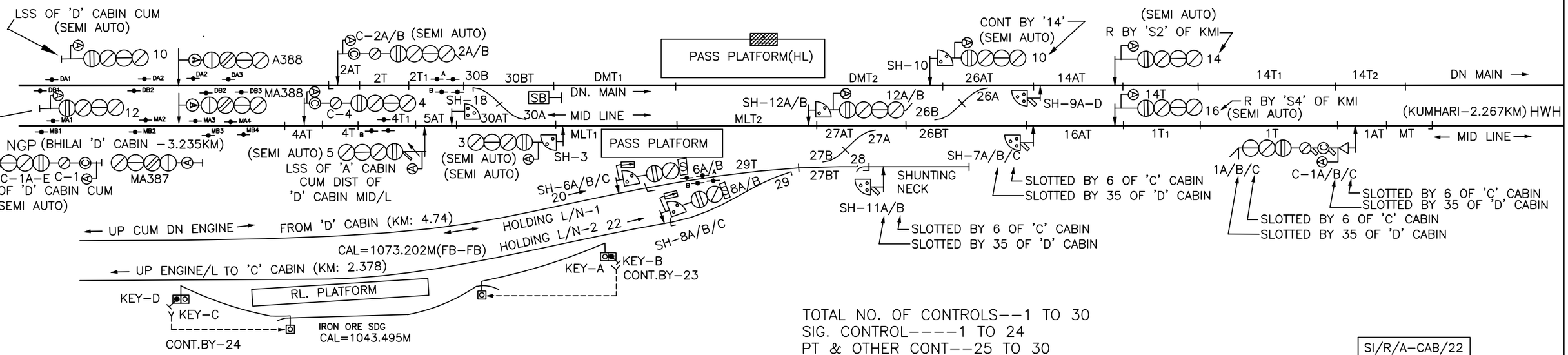

TOTAL NO. OF CONTROLS--1 TO 30
SIG. CONTROL----1 TO 24
PT & OTHER CONT--25 TO 30
SPACES--13,15,17,19,21.

SI/R/A-CAB/22

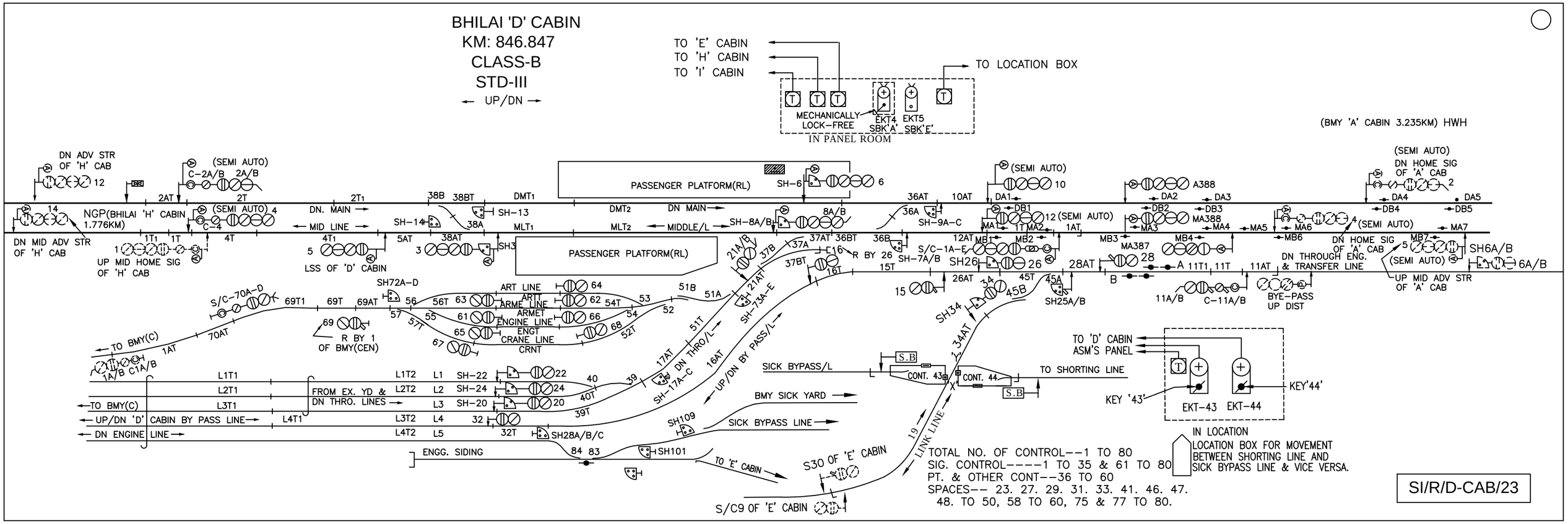
BHILAI 'D' CABIN
KM: 846.847
CLASS-B
STD-III
UP/DN
TO 'E' CABIN
TO 'H' CABIN
TO 'I' CABIN
TO LOCATION BOX
MECHANICALLY LOCK-FREE
EKT4 SBK'A'
EKT5 SBK'E'
IN PANEL ROOM
(BMY 'A' CABIN 3.235KM) HWH
DN ADV STR OF 'H' CAB
(SEMI AUTO)
C-2A/B 2A/B
PASSENGER PLATFORM(RL)
SH-6
(SEMI AUTO)
DN HOME SIG OF 'A' CAB
NGP(BHILAI 'H' CABIN 1.776KM)
DN. MAIN
MID LINE
SH-14
SH-13
DMT1
DMT2
DN MAIN
MLT1
MLT2
MIDDLE/L
SH-8A/B
SH-9A-C
A388
MA388
MA387
DN MID ADV STR OF 'H' CAB
UP MID HOME SIG OF 'H' CAB
LSS OF 'D' CABIN
SH3
PASSENGER PLATFORM(RL)
R BY 26
SH-7A/B
S/C-1A-E
SH26
DN HOME SIG OF 'A' CAB
DN THROUGH ENG. & TRANSFER LINE
BYE-PASS UP DIST
UP MID ADV STR OF 'A' CAB
SH6A/B
6A/B
S/C-70A-D
SH72A-D
ART LINE
ARME LINE
ENGINE LINE
CRANE LINE
R BY 1 OF BMY(CEN)
TO BMY(C)
SH-21A/B
SH-73A-E
SH-17A-C
DN THRO/L
UP/DN BY PASS/L
SH34
SH25A/B
SICK BYPASS/L
CONT. 43
CONT. 44
TO SHORTING LINE
TO 'D' CABIN
ASM'S PANEL
KEY '43'
KEY'44'
EKT-43
EKT-44
L1T1
L2T1
L3T1
L1T2
L2T2
L3T2
L4T2
FROM EX. YD & DN THRO. LINES
UP/DN 'D' CABIN BY PASS LINE
DN ENGINE LINE
SH-22
SH-24
SH-20
SH28A/B/C
BMY SICK YARD
SICK BYPASS LINE
SH109
SH101
ENGG. SIDING
TO 'E' CABIN
S30 OF 'E' CABIN
S/C9 OF 'E' CABIN
LINK LINE
IN LOCATION
LOCATION BOX FOR MOVEMENT BETWEEN SHORTING LINE AND SICK BYPASS LINE & VICE VERSA.
TOTAL NO. OF CONTROL--1 TO 80
SIG. CONTROL----1 TO 35 & 61 TO 80
PT. & OTHER CONT--36 TO 60
SPACES-- 23. 27. 29. 31. 33. 41. 46. 47.
48. TO 50, 58 TO 60, 75 & 77 TO 80.
SI/R/D-CAB/23

BHILAI 'H' CABIN
KM: 848.443
CLASS-B
STD-III

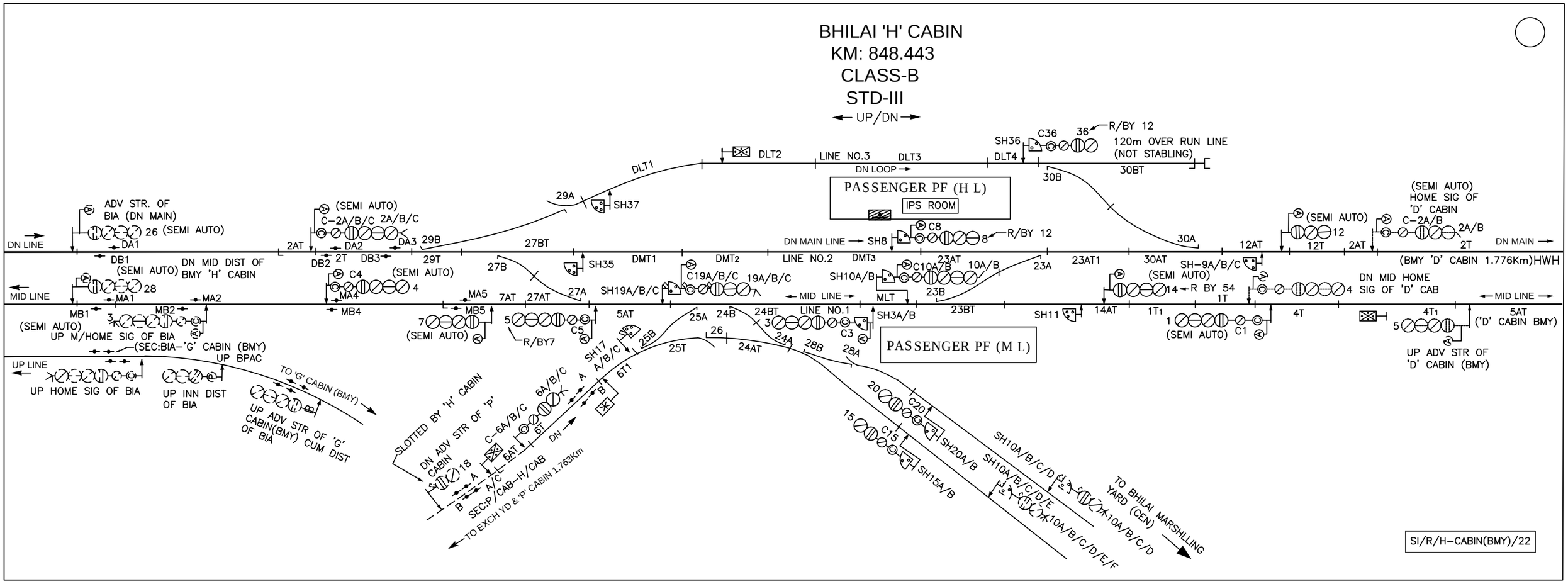

SI/R/H–CABIN(BMY)/22

UP MAIN LINE `G' CABINS OF BMY

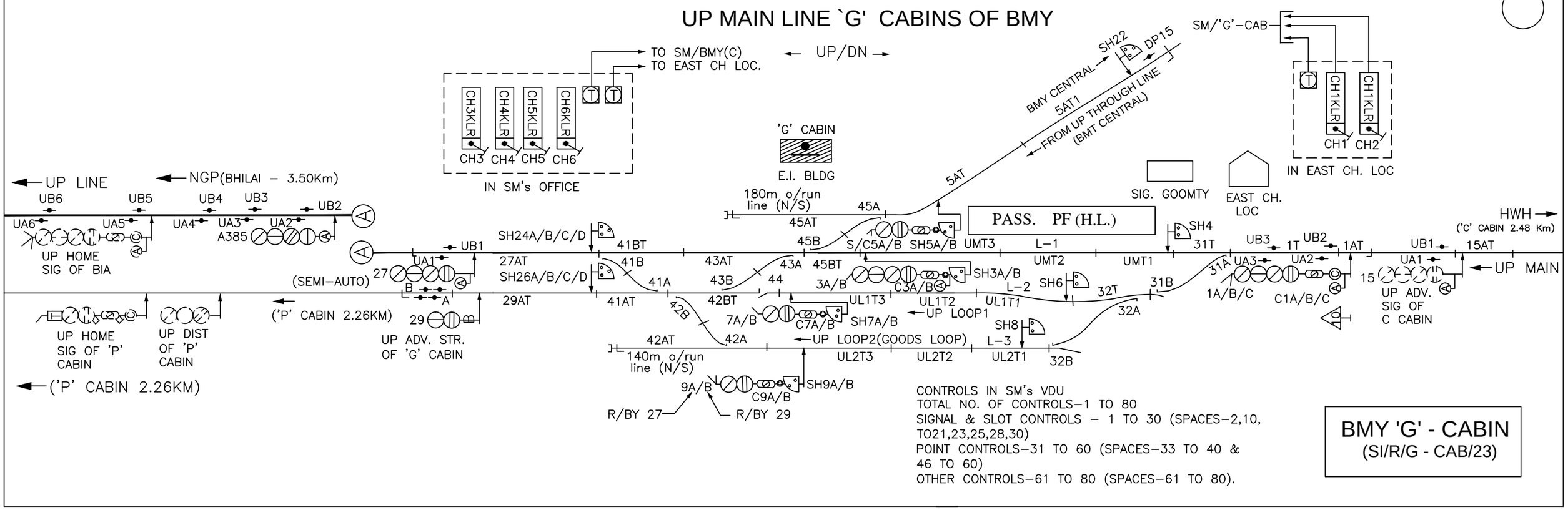

CONTROLS IN SM's VDU
TOTAL NO. OF CONTROLS–1 TO 80
SIGNAL & SLOT CONTROLS – 1 TO 30 (SPACES–2,10, TO21,23,25,28,30)
POINT CONTROLS–31 TO 60 (SPACES–33 TO 40 & 46 TO 60)
OTHER CONTROLS–61 TO 80 (SPACES–61 TO 80).

BMY 'G' - CABIN
(SI/R/G - CAB/23)

UP MAIN LINE `G' CABINS OF BMY

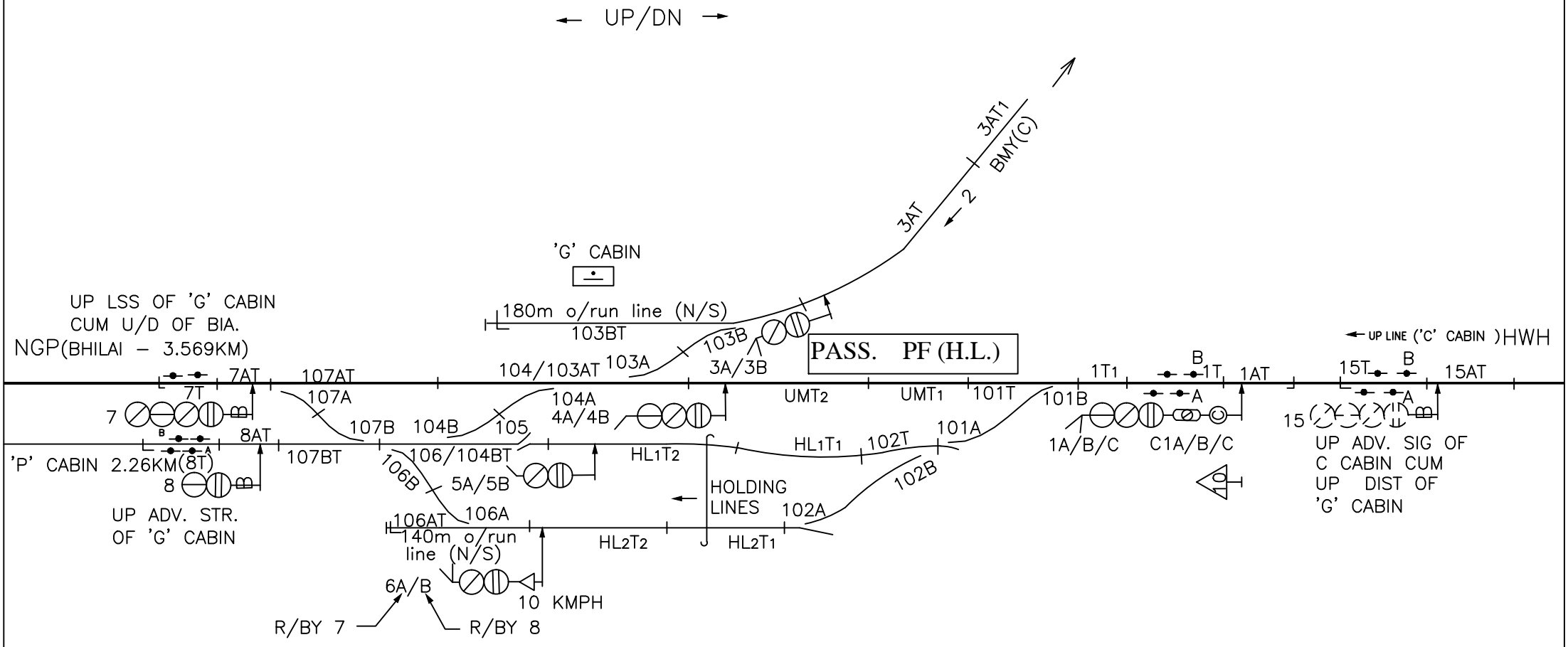

'G' CABIN
SI 10124

UP MAIN LINE `G' CABINS OF BMY

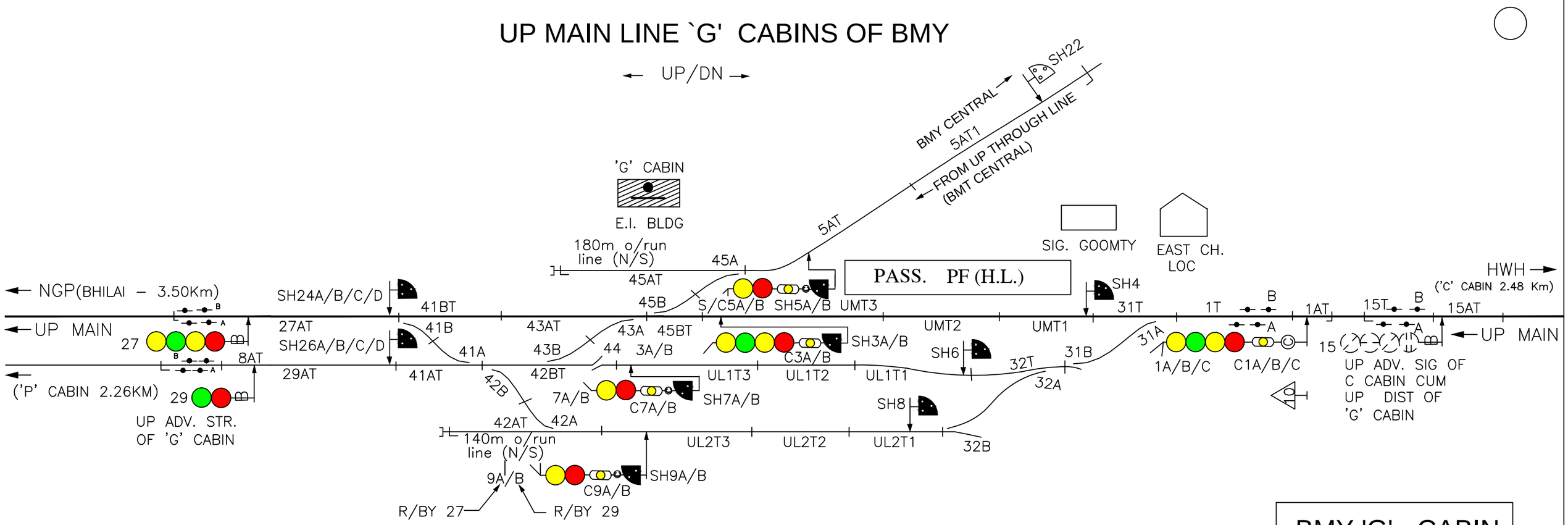

BMY 'G' - CABIN
(SI/R/G - CAB/21)

UP MAIN LINE `C' CABIN OF BMY

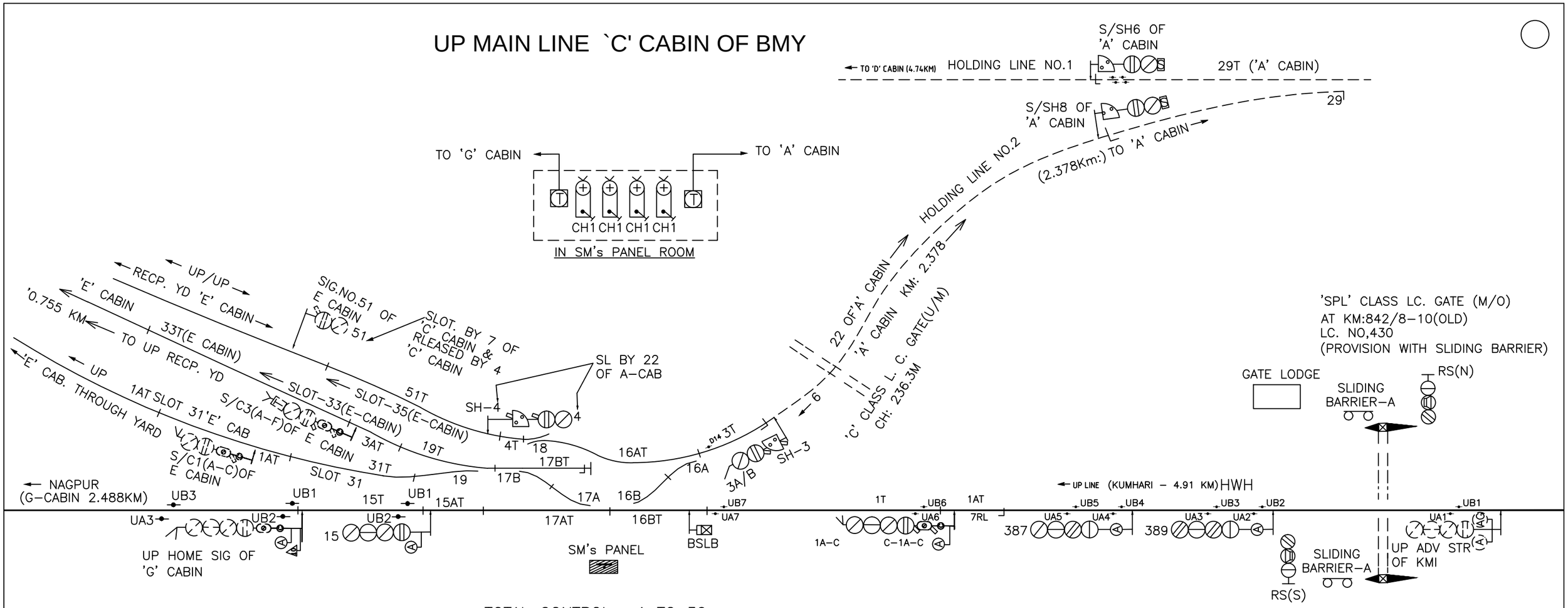

TOTAL CONTROL--1 TO 30
SIG. CONTROL& SLOT----1 TO 15 (SPACES--2. 5. 8. TO 14.
PT. & OTHER CONT--16 TO 30
SPACES--20. TO. 25. & 26 TO 30

SI/R/C-CAB/23

UP MAIN LINE `C' CABIN OF BMY

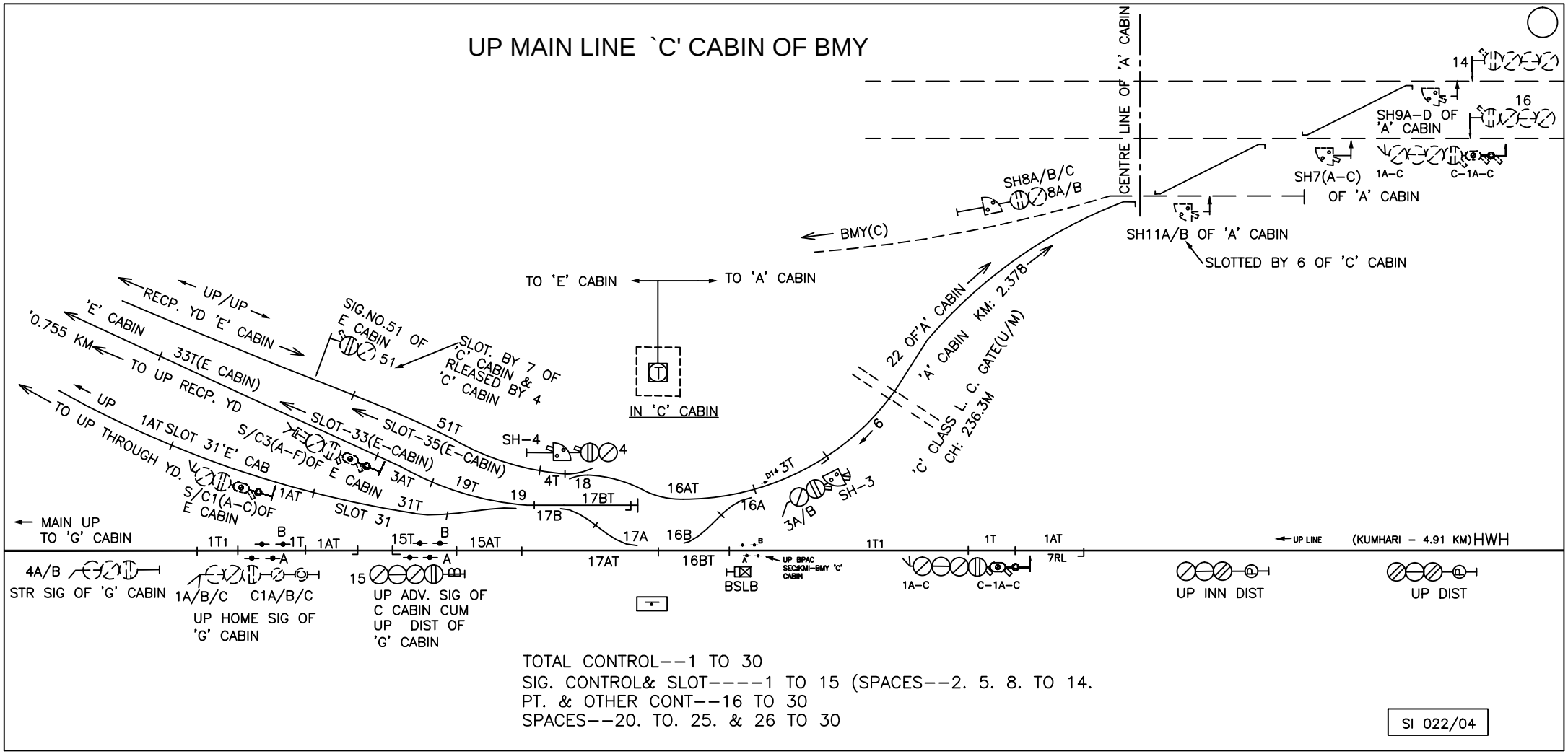

TOTAL CONTROL––1 TO 30
SIG. CONTROL& SLOT––––1 TO 15 (SPACES––2. 5. 8. TO 14.
PT. & OTHER CONT––16 TO 30
SPACES––20. TO. 25. & 26 TO 30

SI 022/04

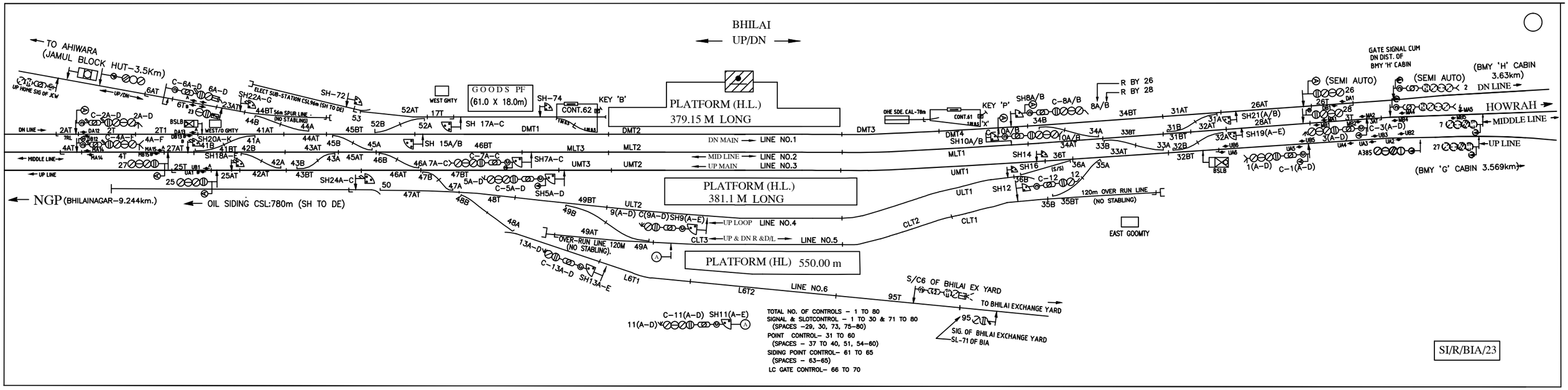
BHILAI
UP/DN
TO AHIWARA
(JAMUL BLOCK HUT-3.5Km)
GOODS PF
(61.0 X 18.0m)
PLATFORM (H.L.)
379.15 M LONG
PLATFORM (H.L.)
381.1 M LONG
PLATFORM (HL) 550.00 m
DN MAIN LINE NO.1
MID LINE LINE NO.2
UP MAIN LINE NO.3
UP LOOP LINE NO.4
UP & DN R &D/L LINE NO.5
LINE NO.6
NGP (BHILAINAGAR-9.244km.)
OIL SIDING CSL:780m (SH TO DE)
HOWRAH
MIDDLE LINE
UP LINE
DN LINE
(BMY 'G' CABIN 3.569km)
(BMY 'H' CABIN 3.63km)
GATE SIGNAL CUM DN DIST. OF BMY 'H' CABIN
(SEMI AUTO)
EAST GOOMTY
TO BHILAI EXCHANGE YARD
S/C6 OF BHILAI EX YARD
SIG. OF BHILAI EXCHANGE YARD SL-71 OF BIA
120m OVER RUN LINE (NO STABLING)
OVER-RUN LINE 120M (NO STABLING)
ELECT SUB-STATION CSL:96m (SH TO DE)
56m SPUR LINE (NO STABLING)
OHE SDE. CAL.-78m
R BY 26
R BY 28
TOTAL NO. OF CONTROLS - 1 TO 80
SIGNAL & SLOTCONTROL - 1 TO 30 & 71 TO 80
(SPACES -29, 30, 73, 75-80)
POINT CONTROL- 31 TO 60
(SPACES - 37 TO 40, 51, 54-60)
SIDING POINT CONTROL- 61 TO 65
(SPACES - 63-65)
LC GATE CONTROL- 66 TO 70

SI/R/BIA/23

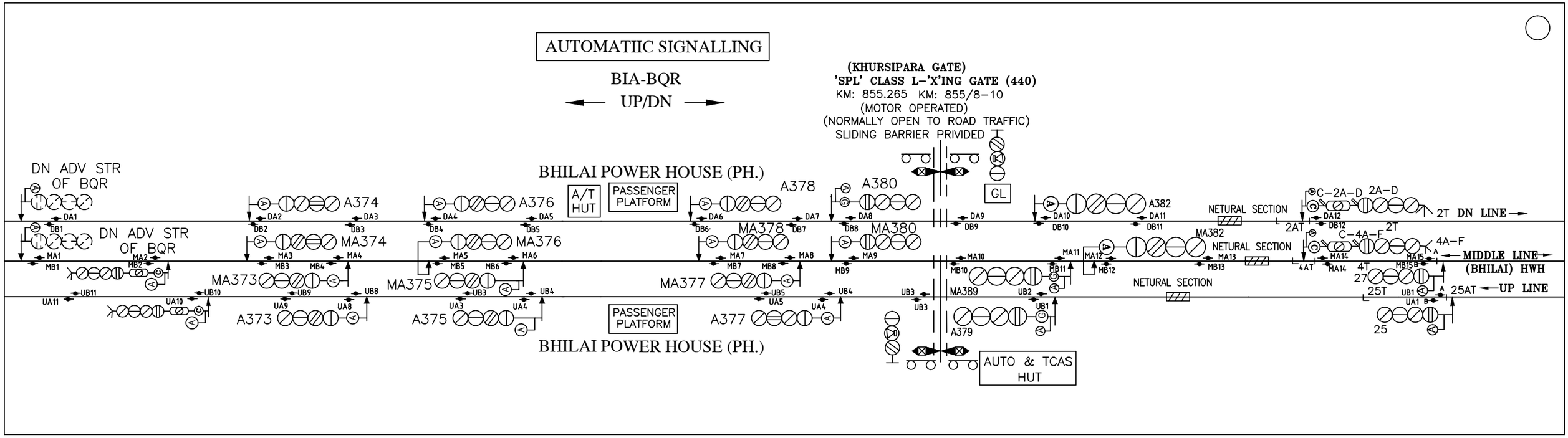
AUTOMATIIC SIGNALLING
BIA-BQR
UP/DN
(KHURSIPARA GATE)
'SPL' CLASS L-'X'ING GATE (440)
KM: 855.265 KM: 855/8-10
(MOTOR OPERATED)
(NORMALLY OPEN TO ROAD TRAFFIC)
SLIDING BARRIER PRIVIDED
DN ADV STR OF BQR
DN ADV STR OF BQR
BHILAI POWER HOUSE (PH.)
A/T HUT
PASSENGER PLATFORM
GL
A374
A376
A378
A380
A382
MA374
MA376
MA378
MA380
MA382
MA373
MA375
MA377
MA389
A373
A375
A377
A379
NETURAL SECTION
NETURAL SECTION
NETURAL SECTION
C-2A-D
2A-D
2T
DN LINE
2AT
C-4A-F
4A-F
MIDDLE LINE
(BHILAI) HWH
4T
27
25T
25AT
UP LINE
25
PASSENGER PLATFORM
BHILAI POWER HOUSE (PH.)
AUTO & TCAS HUT

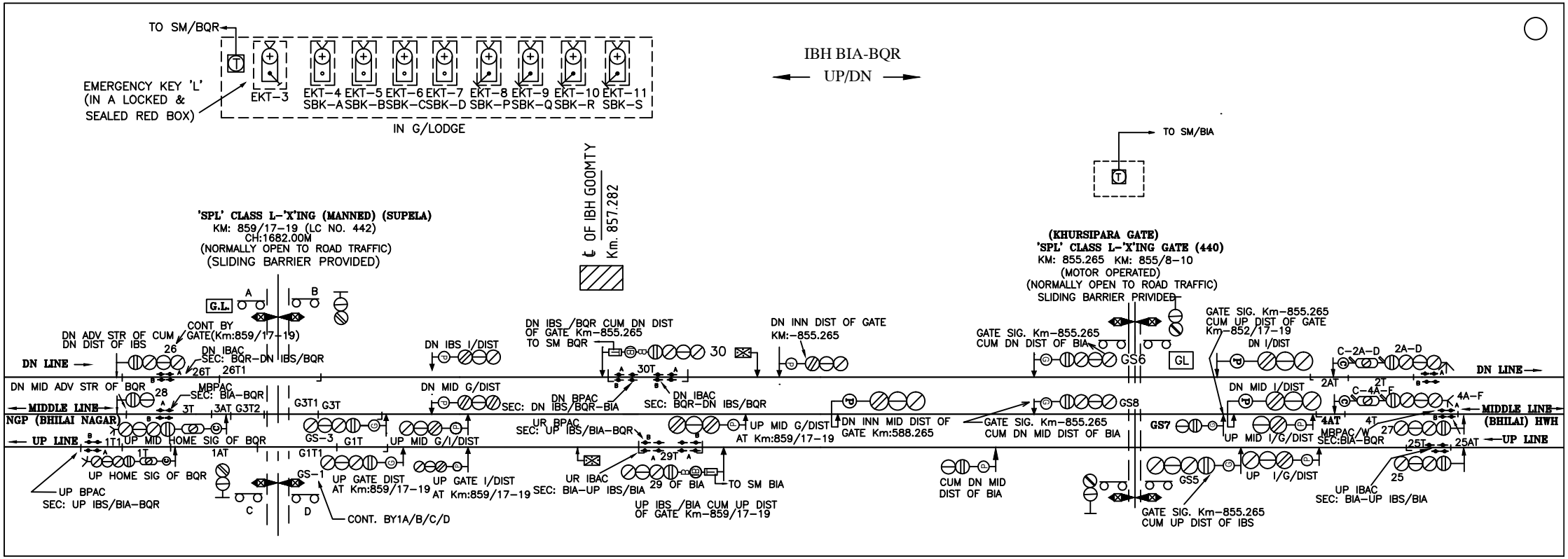
TO SM/BQR
EMERGENCY KEY 'L'
(IN A LOCKED &
SEALED RED BOX)
EKT-3
EKT-4 SBK-A
EKT-5 SBK-B
EKT-6 SBK-C
EKT-7 SBK-D
EKT-8 SBK-P
EKT-9 SBK-Q
EKT-10 SBK-R
EKT-11 SBK-S
IN G/LODGE
IBH BIA-BQR
UP/DN
TO SM/BIA
℄ OF IBH GOOMTY
Km. 857.282
'SPL' CLASS L-'X'ING (MANNED) (SUPELA)
KM: 859/17-19 (LC NO. 442)
CH:1682.00M
(NORMALLY OPEN TO ROAD TRAFFIC)
(SLIDING BARRIER PROVIDED)
(KHURSIPARA GATE)
'SPL' CLASS L-'X'ING GATE (440)
KM: 855.265 KM: 855/8-10
(MOTOR OPERATED)
(NORMALLY OPEN TO ROAD TRAFFIC)
SLIDING BARRIER PRIVIDED
G.L.
A
B
CONT BY GATE(Km:859/17-19)
DN ADV STR OF CUM DN DIST OF IBS
26
DN IBAC SEC: BQR-DN IBS/BQR
26T
26T1
DN LINE
DN IBS I/DIST
DN IBS /BQR CUM DN DIST OF GATE Km-855.265 TO SM BQR
30
30T
DN INN DIST OF GATE KM:-855.265
GATE SIG. Km-855.265 CUM DN DIST OF BIA
GS6
GL
GATE SIG. Km-855.265 CUM UP DIST OF GATE Km-852/17-19
DN I/DIST
C-2A-D
2A-D
2AT
2T
DN LINE
DN MID ADV STR OF BQR
28
MBPAC SEC: BIA-BQR
3T
3AT G3T2
G3T1 G3T
DN MID G/DIST
SEC: DN IBS/BQR-BIA
DN BPAC
DN IBAC SEC: BQR-DN IBS/BQR
DN MID I/DIST
C-4A-F
4A-F
MIDDLE LINE
MIDDLE LINE
NGP (BHILAI NAGAR)
UP LINE
1T1
UP MID HOME SIG OF BQR
1T
1AT
GS-3
G1T
UP MID G/I/DIST
UR BPAC SEC: UP IBS/BIA-BQR
UP MID G/DIST AT Km:859/17-19
DN INN MID DIST OF GATE Km:588.565
GATE SIG. Km-855.265 CUM DN MID DIST OF BIA
GS7
4AT
4T
MBPAC/W SEC:BIA-BQR
27
(BHILAI) HWH
UP LINE
UP MID I/G/DIST
25T
25AT
G1T1
UP HOME SIG OF BQR
GS-1
UP GATE DIST AT Km:859/17-19
UP GATE I/DIST AT Km:859/17-19
UR IBAC SEC: BIA-UP IBS/BIA
29T
29 OF BIA
TO SM BIA
UP IBS /BIA CUM UP DIST OF GATE Km-859/17-19
CUM DN MID DIST OF BIA
GS5
UP I/G/DIST
25
UP IBAC SEC: BIA-UP IBS/BIA
UP BPAC SEC: UP IBS/BIA-BQR
C
D
CONT. BY1A/B/C/D
GATE SIG. Km-855.265 CUM UP DIST OF IBS

BHILAI NAGAR

KM:861.12 'B'

CLASS STD III

← UP/DN →

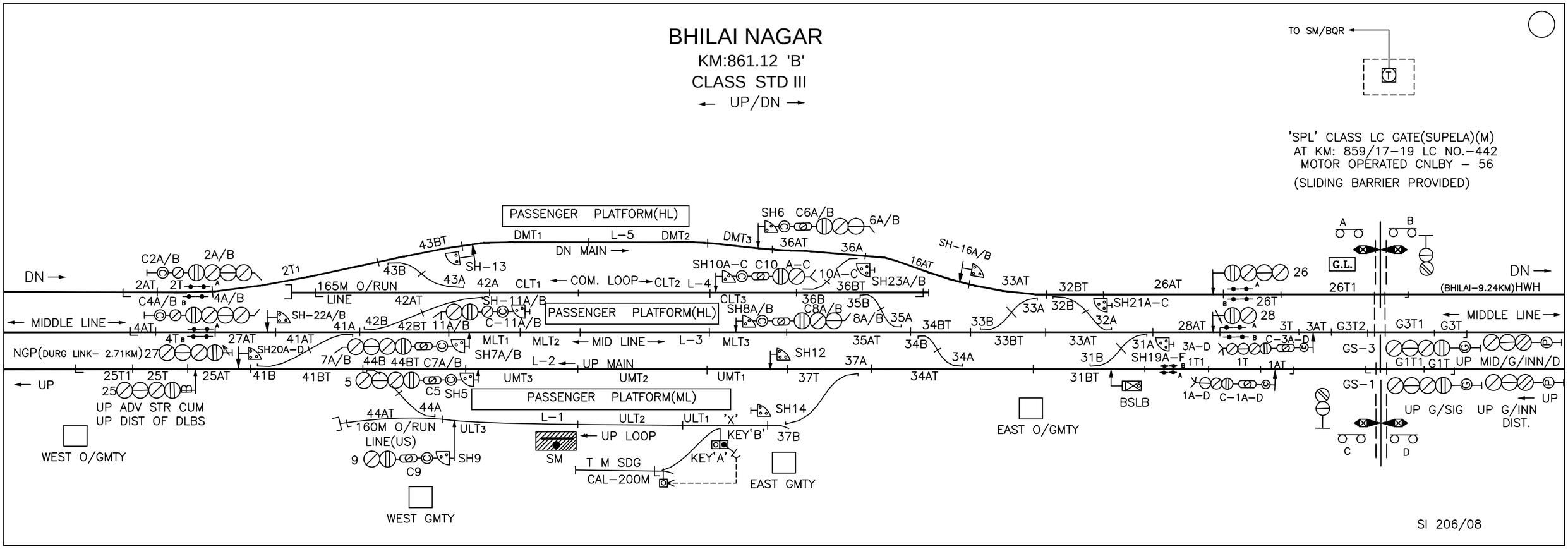

BHILAI NAGAR

KM:861.12 'B'

CLASS STD III

← UP/DN →

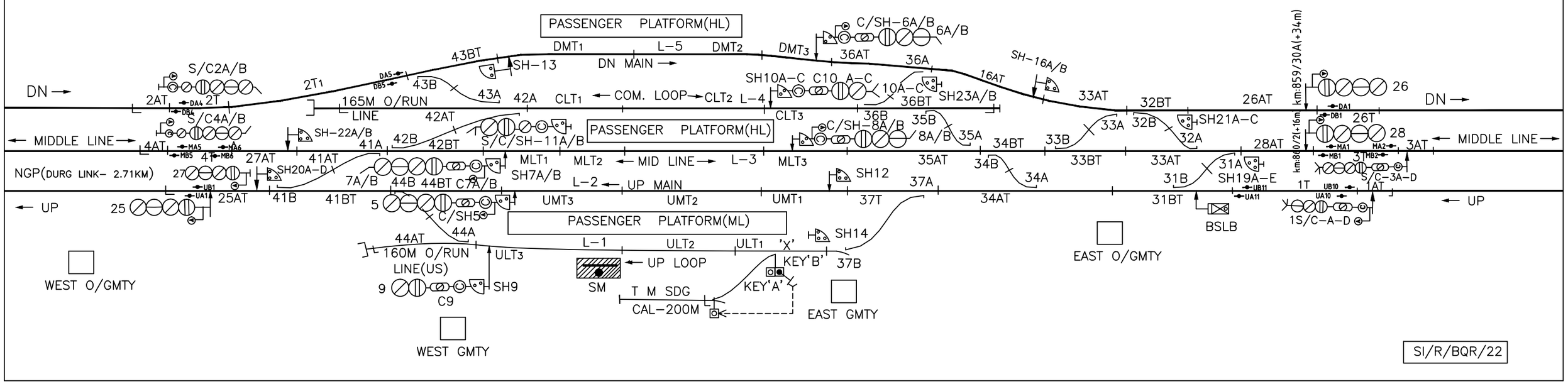

SI/R/BQR/22

DURG LINK BLOCK STATION

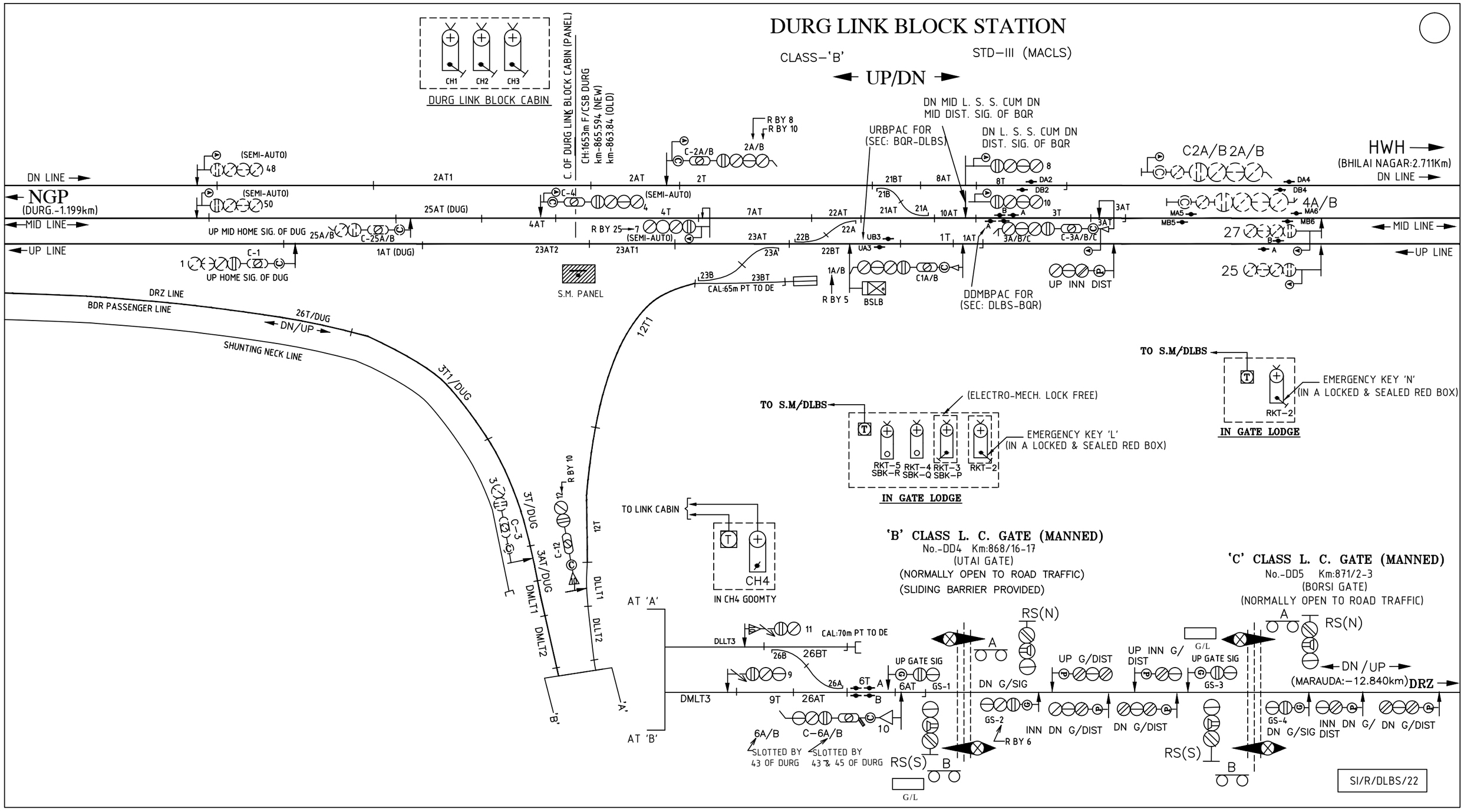

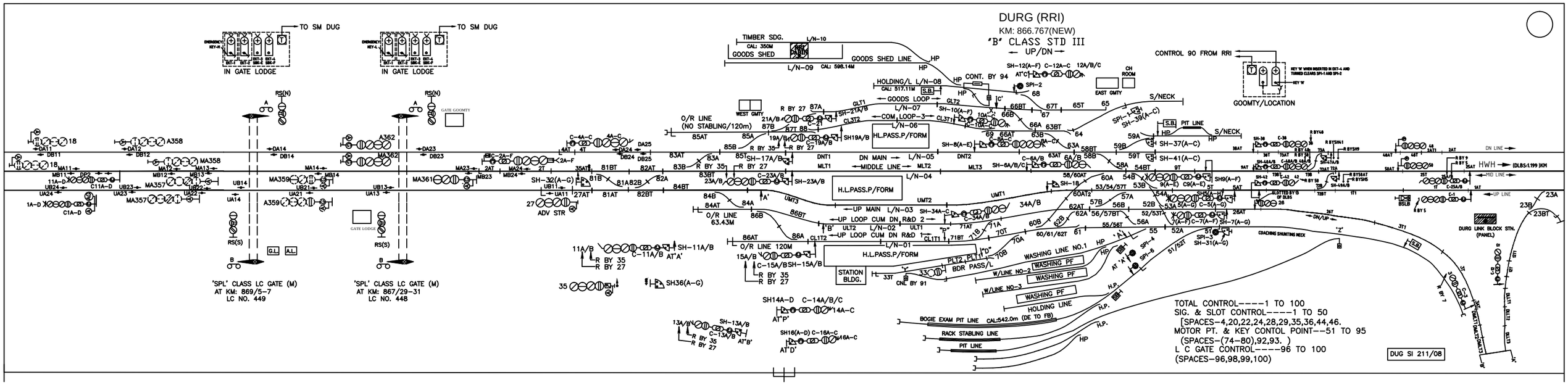
DURG (RRI)
KM: 866.767(NEW)
"B" CLASS STD III
UP/DN
TO SM DUG
IN GATE LODGE
TIMBER SDG.
GOODS SHED
L/N-10
L/N-09
GOODS SHED LINE
CONTROL 90 FROM RRI
GOOMTY/LOCATION
CONT. BY 94
HOLDING/L L/N-08
GOODS LOOP
L/N-07
COM. LOOP-3
L/N-06
HL.PASS.P/FORM
O/R LINE
(NO STABLING/120m)
WEST GMTY
EAST GMTY
CH ROOM
S/NECK
PIT LINE
DN MAIN
L/N-05
MIDDLE LINE
L/N-04
H.L.PASS.P/FORM
HWH
(DLBS:1.199)KM
DN LINE
MID LINE
UP LINE
ADV STR
O/R LINE 63.43M
UP MAIN L/N-03
UP LOOP CUM DN R&D 2
UP LOOP CUM DN R&D 1
L/N-02
L/N-01
O/R LINE 120M
STATION BLDG.
BDR PASS/L
WASHING LINE NO.1
W/LINE NO-2
W/LINE NO-3
WASHING PF
HOLDING LINE
BOGIE EXAM PIT LINE
CAL:542.0m (DE TO FB)
RACK STABLING LINE
PIT LINE
COACHING SHUNTING NECK
DURG LINK BLOCK STN.
(PANEL)
GATE GOOMTY
GATE LODGE
RS(N)
RS(S)
'SPL' CLASS LC GATE (M)
AT KM: 869/5-7
LC NO. 449
'SPL' CLASS LC GATE (M)
AT KM: 867/29-31
LC NO. 448
TOTAL CONTROL----1 TO 100
SIG. & SLOT CONTROL----1 TO 50
[SPACES-4,20,22,24,28,29,35,36,44,46.
MOTOR PT. & KEY CONTOL POINT--51 TO 95
(SPACES-(74-80),92,93.)
L C GATE CONTROL----96 TO 100
(SPACES-96,98,99,100)
DUG SI 211/08

MARAUDA

KM: 877.051 (OLD)
Km:878.408 (NEW)
'B' CLASS,STD - III

←DN/UP→
(FOR DUG-MXA SECTION)
←UP/DN→
(FOR MXA-DRZ SECTION)

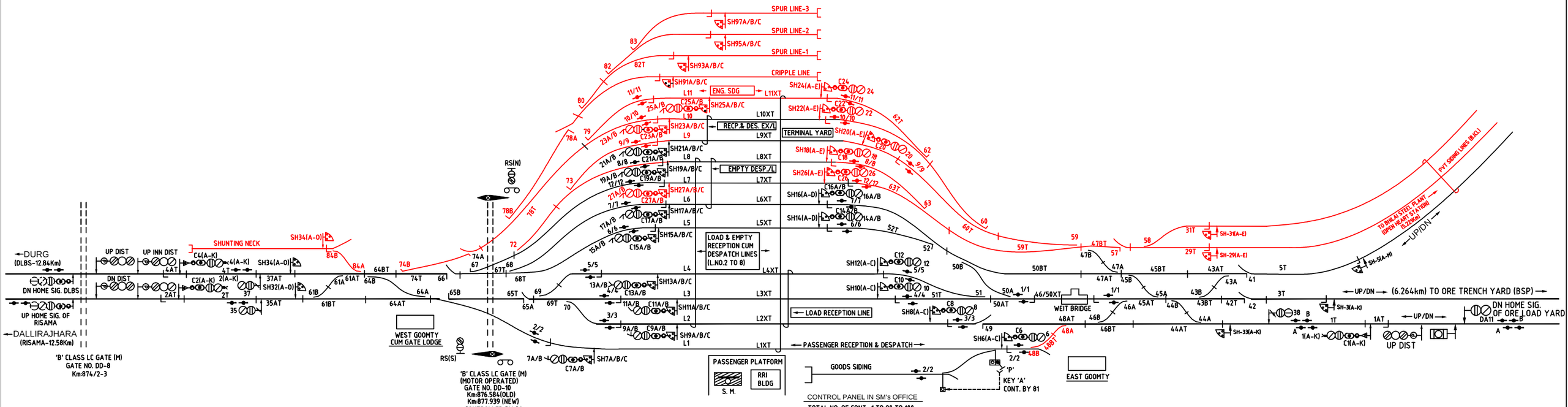

CONTROL PANEL IN SM's OFFICE

TOTAL NO. OF CONT.-1 TO 90 TO 100
SIGNAL CONT. 1 TO 40 & 91 TO 100 (SPACES-28, 36,39,40,92,94,96,98,99,100)
POINT CONT.-41 TO 85 (SPACES- 53,54,55,56,71,75,76,77,85)
L.C. GATE CONTROLS-86 TO 90 (SPACES - 87 TO 90)

S.I.- 324/12

MARAUDA (RRI)

KM: 877.051 (OLD)
Km:878.408 (NEW)
'B' CLASS,STD - III

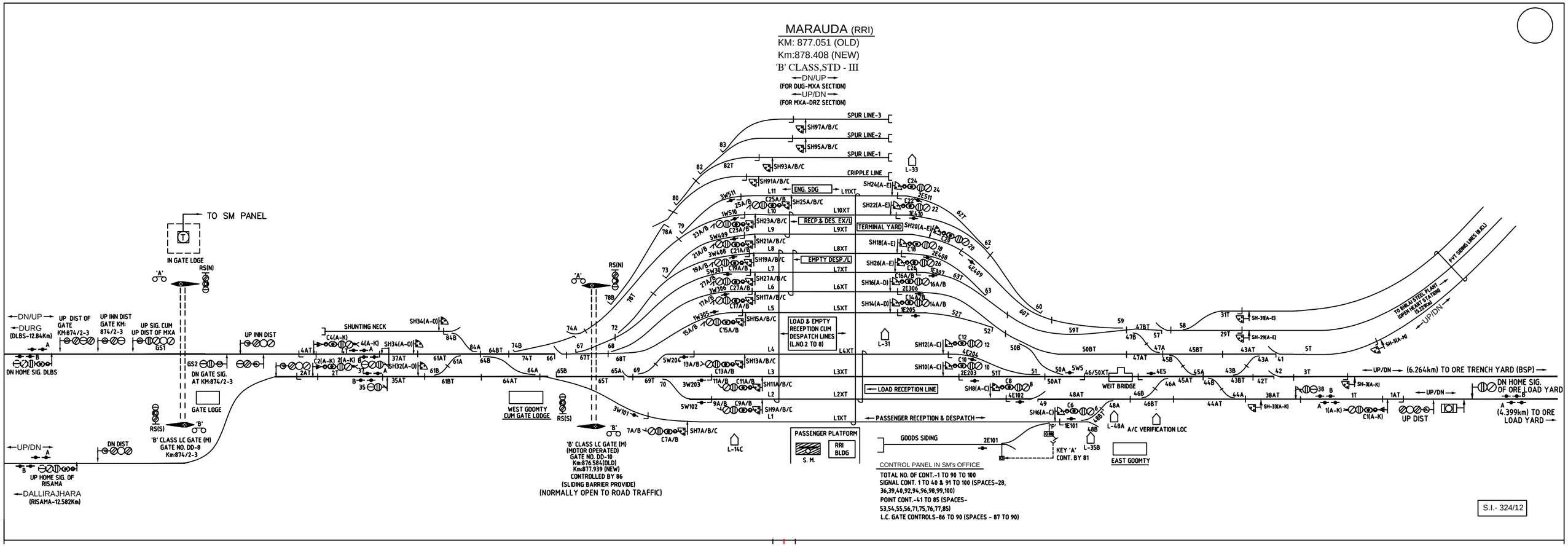

CONTROL PANEL IN SM's OFFICE

TOTAL NO. OF CONT.-1 TO 90 TO 100
SIGNAL CONT. 1 TO 40 & 91 TO 100 (SPACES-28, 36,39,40,92,94,96,98,99,100)
POINT CONT.-41 TO 85 (SPACES- 53,54,55,56,71,75,76,77,85)
L.C. GATE CONTROLS-86 TO 90 (SPACES - 87 TO 90)

S.I.- 324/12

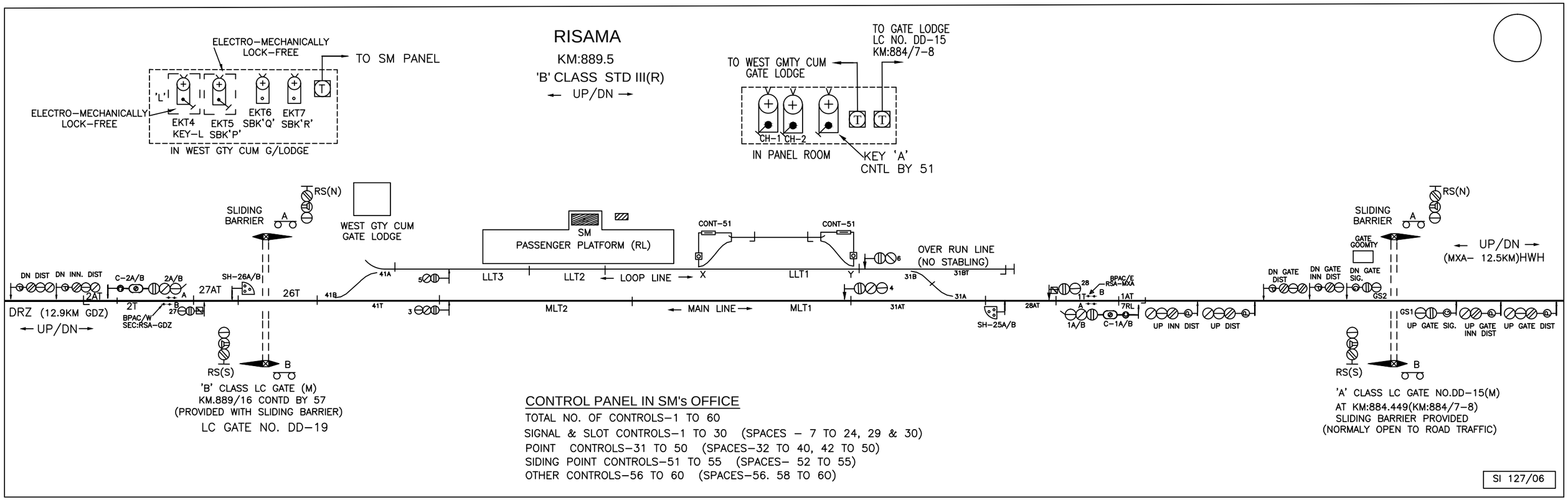
RISAMA
KM:889.5
'B' CLASS STD III(R)
← UP/DN →
ELECTRO-MECHANICALLY LOCK-FREE
TO SM PANEL
'L'
EKT4 KEY-L
EKT5 SBK'P'
EKT6 SBK'Q'
EKT7 SBK'R'
IN WEST GTY CUM G/LODGE
TO GATE LODGE LC NO. DD-15 KM:884/7-8
TO WEST GMTY CUM GATE LODGE
CH-1 CH-2
IN PANEL ROOM
KEY 'A' CNTL BY 51
RS(N)
SLIDING BARRIER
WEST GTY CUM GATE LODGE
SM PASSENGER PLATFORM (RL)
CONT-51
OVER RUN LINE (NO STABLING)
DN DIST
DN INN. DIST
C-2A/B
2A/B
SH-26A/B
27AT
26T
2AT
2T
BPAC/W SEC:RSA-GDZ
DRZ (12.9KM GDZ)
← UP/DN →
41A
41B
41T
LLT3
LLT2
← LOOP LINE →
LLT1
MLT2
← MAIN LINE →
MLT1
31B
31BT
31A
31AT
28AT
SH-25A/B
BPAC/E RSA-MXA
1A/B
C-1A/B
UP INN DIST
UP DIST
DN GATE DIST
DN GATE INN DIST
DN GATE SIG.
GATE GOOMTY
GS2
GS1
UP GATE SIG.
UP GATE INN DIST
UP GATE DIST
← UP/DN →
(MXA- 12.5KM)HWH
RS(S)
'B' CLASS LC GATE (M)
KM.889/16 CONTD BY 57
(PROVIDED WITH SLIDING BARRIER)
LC GATE NO. DD-19
'A' CLASS LC GATE NO.DD-15(M)
AT KM:884.449(KM:884/7-8)
SLIDING BARRIER PROVIDED
(NORMALY OPEN TO ROAD TRAFFIC)
CONTROL PANEL IN SM's OFFICE
TOTAL NO. OF CONTROLS-1 TO 60
SIGNAL & SLOT CONTROLS-1 TO 30 (SPACES - 7 TO 24, 29 & 30)
POINT CONTROLS-31 TO 50 (SPACES-32 TO 40, 42 TO 50)
SIDING POINT CONTROLS-51 TO 55 (SPACES- 52 TO 55)
OTHER CONTROLS-56 TO 60 (SPACES-56. 58 TO 60)
SI 127/06

GUNDARDEHI

KM:902.4

'B' CLASS STD III(R)

← UP/DN →

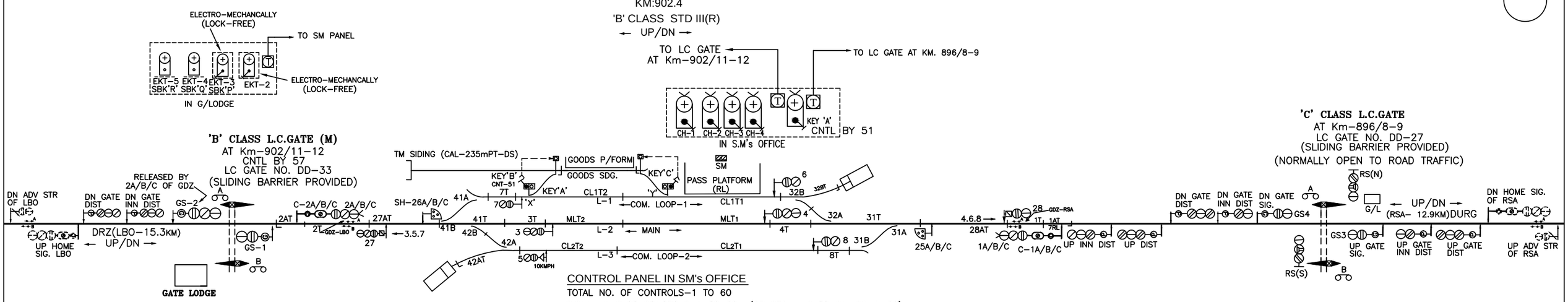

CONTROL PANEL IN SM's OFFICE

TOTAL NO. OF CONTROLS-1 TO 60

SIGNAL & SLOT CONTROLS-1 TO 30 (SPACES - 9 TO 24, 29 & 30)

POINT CONTROLS-31 TO 50 (SPACES-33 TO 40, 43 TO 50)

SIDING POINT CONTROLS-51 TO 55 (SPACES- 52 - 55)

OTHER CONTROLS-56 TO 60 (SPACES-56. 58 TO 60)

SI/R/GDZ/22

LATABOR

KM:917.7

B' CLASS STD III (R)

← UP/DN →

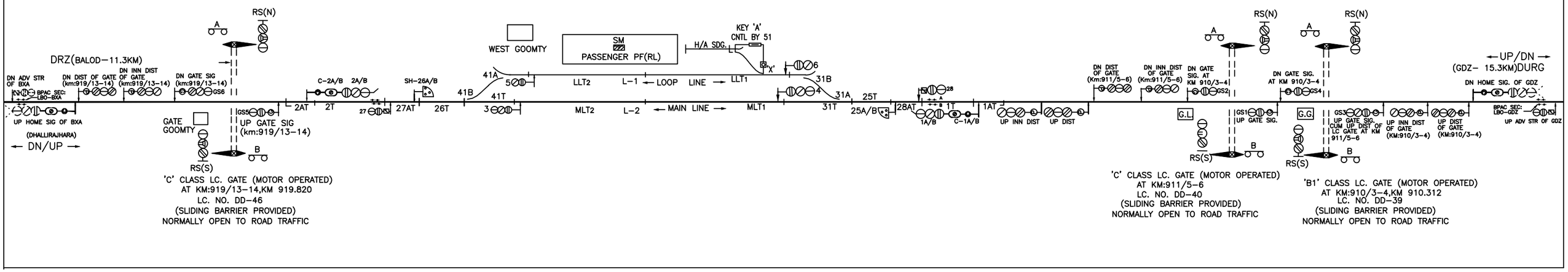

BALOD

KM:929.0

'B' CLASS STD (III)R

← UP/DN →

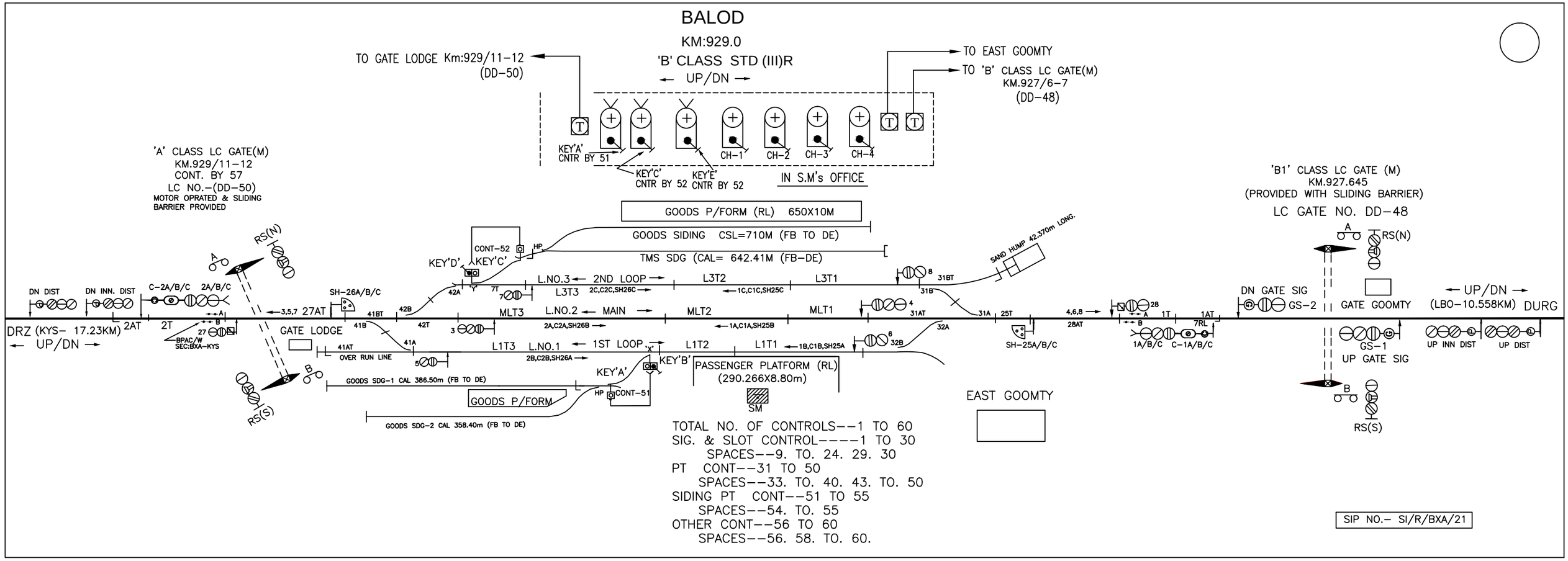

TOTAL NO. OF CONTROLS--1 TO 60
SIG. & SLOT CONTROL----1 TO 30
SPACES--9. TO. 24. 29. 30
PT CONT--31 TO 50
SPACES--33. TO. 40. 43. TO. 50
SIDING PT CONT--51 TO 55
SPACES--54. TO. 55
OTHER CONT--56 TO 60
SPACES--56. 58. TO. 60.

SIP NO.- SI/R/BXA/21

KUSUMKASA

KM:946.7

'B' CLASS STD III(R)

← UP/DN →

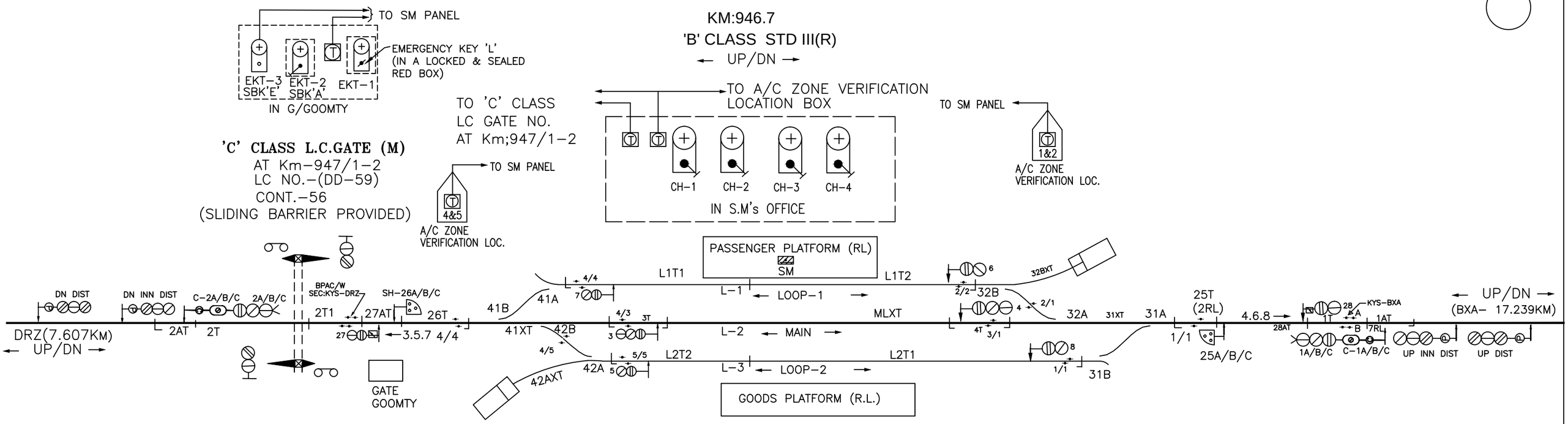

CONTROL PANEL IN SM's OFFICE

TOTAL NO. OF CONTROLS-1 TO 60

SIGNAL & SLOT CONTROLS-1 TO 30 (SPACES - 9 TO 24, 29 & 30)

POINT CONTROLS-31 TO 50 (SPACES-33 TO 40, 43 TO 50)

SIDING POINT CONTROLS-51 TO 55 (SPACES- 51 - 55)

OTHER CONTROLS-57 TO 60 (SPACES-56 TO 60)

SI 139/06

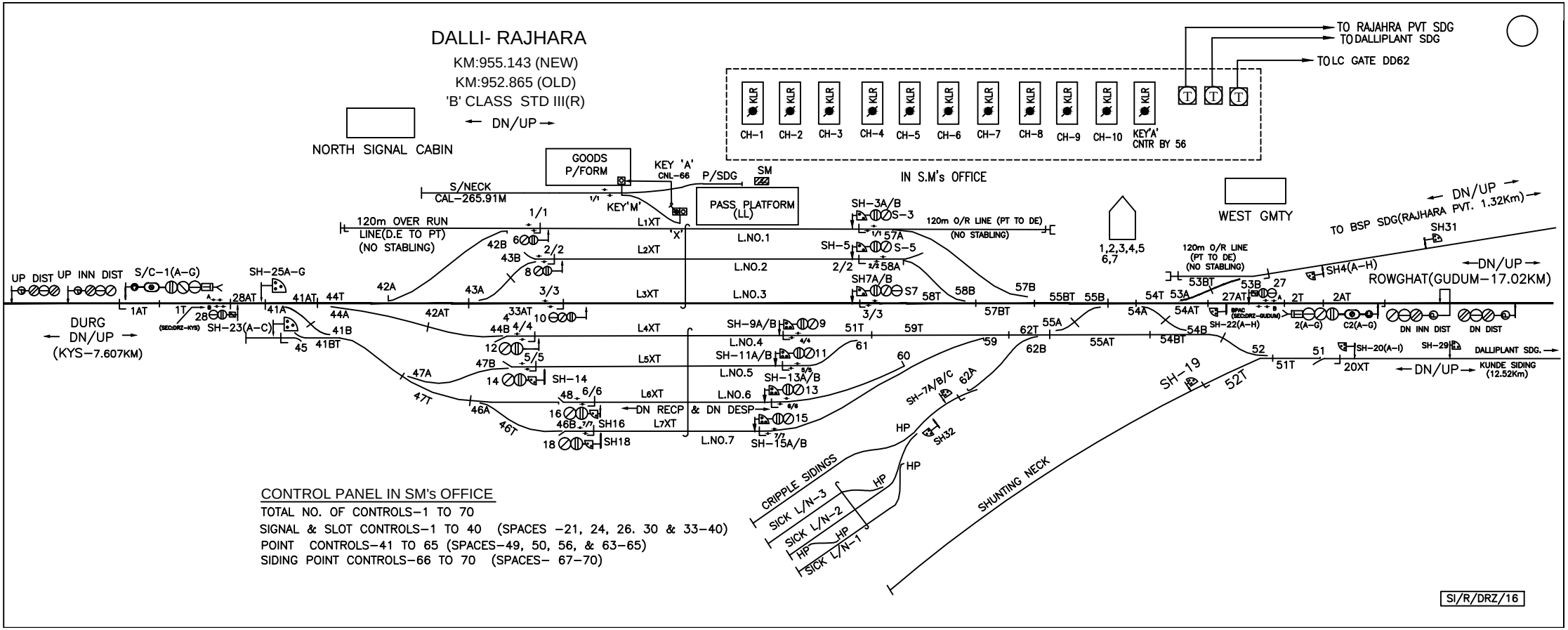

CONTROL PANEL IN SM's OFFICE

TOTAL NO. OF CONTROLS-1 TO 70

SIGNAL & SLOT CONTROLS-1 TO 40 (SPACES -21, 24, 26. 30 & 33-40)

POINT CONTROLS-41 TO 65 (SPACES-49, 50, 56, & 63-65)

SIDING POINT CONTROLS-66 TO 70 (SPACES- 67-70)

DALLI- RAJHARA

KM:955.143 (NEW)
KM:952.865 (OLD)
'B' CLASS STD III(R)
← DN/UP →

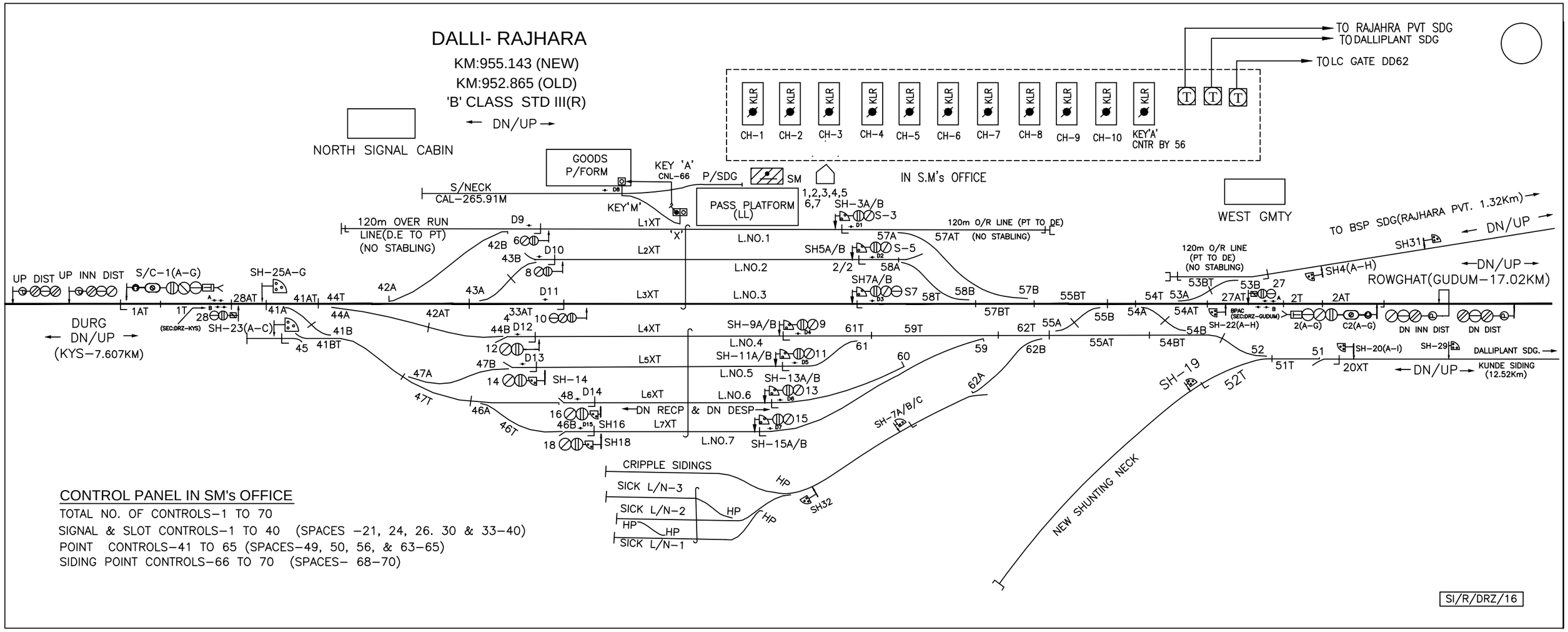

CONTROL PANEL IN SM's OFFICE

TOTAL NO. OF CONTROLS–1 TO 70
SIGNAL & SLOT CONTROLS–1 TO 40 (SPACES –21, 24, 26. 30 & 33–40)
POINT CONTROLS–41 TO 65 (SPACES–49, 50, 56, & 63–65)
SIDING POINT CONTROLS–66 TO 70 (SPACES– 68–70)

SI/R/DRZ/16

GUDUM

KM:972.163

'B' CLASS STD III(R)

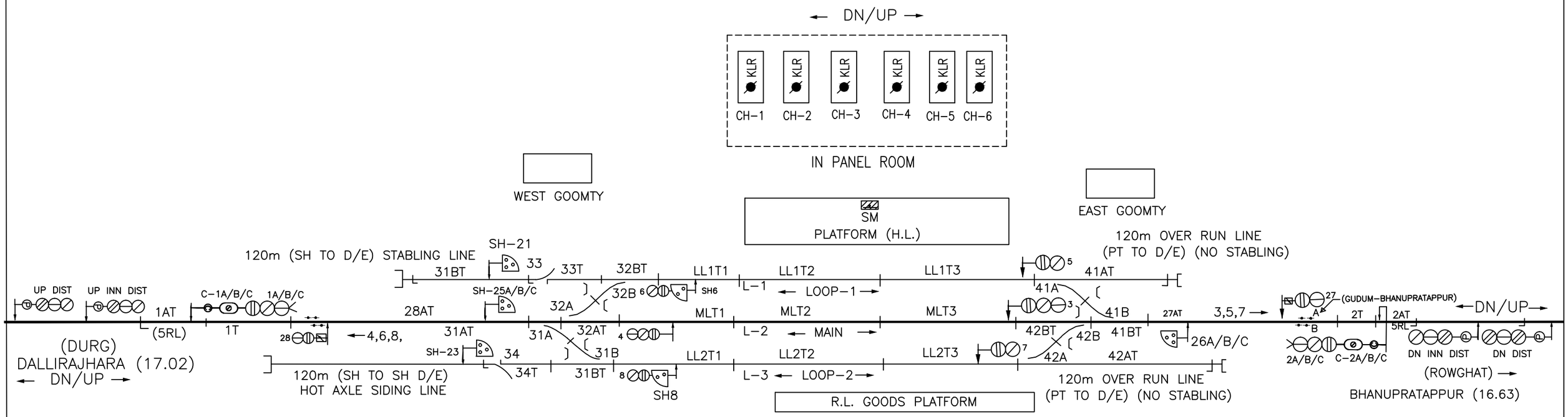

CONTROL PANEL IN SM's OFFICE

TOTAL NO. OF CONTROLS–1 TO 60

SIGNAL & SLOT CONTROLS–1 TO 30 (SPACES – 9 20–25,29,30)

POINT CONTROLS–31 TO 50 (SPACES–34–40 & 43–50)

OTHER CONTROLS–51 TO 60 (SPACES–51 TO 60)

SI–S.I/R/GUDM/15

BHANUPRATAPPUR

KM:988.793(F/HWH)

'B' CLASS STD III(R)

← DN/UP →

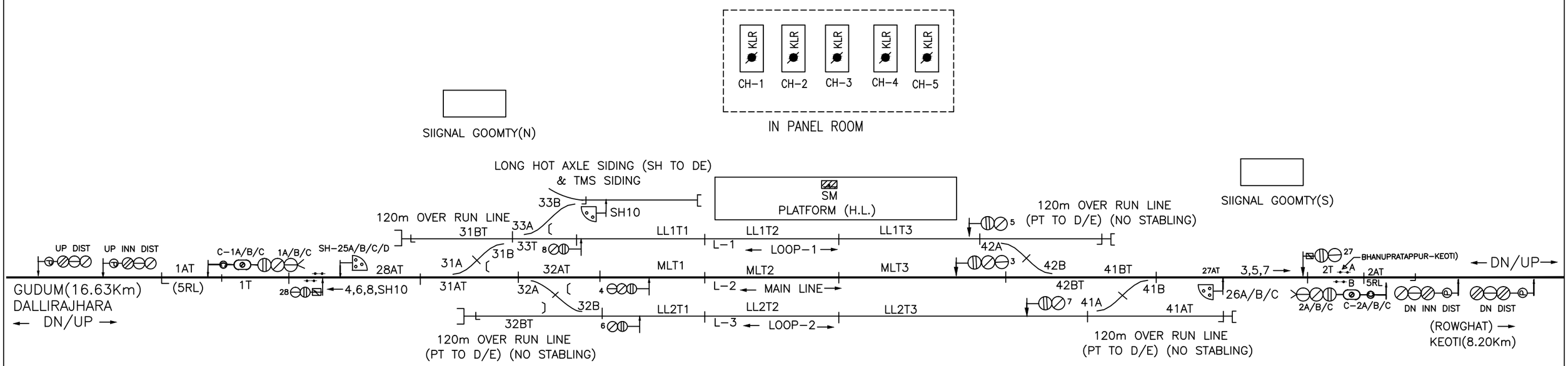

CONTROL PANEL IN SM's OFFICE

TOTAL NO. OF CONTROLS–1 TO 60

SIGNAL & SLOT CONTROLS–1 TO 30 (SPACES – 9 11–24,29,30)

POINT CONTROLS–31 TO 50 (SPACES–34–40 & 43–50)

OTHER CONTROLS–51 TO 60 (SPACES–51 TO 60)

SI–S.I/R/BHANUPRATAPPUR/17

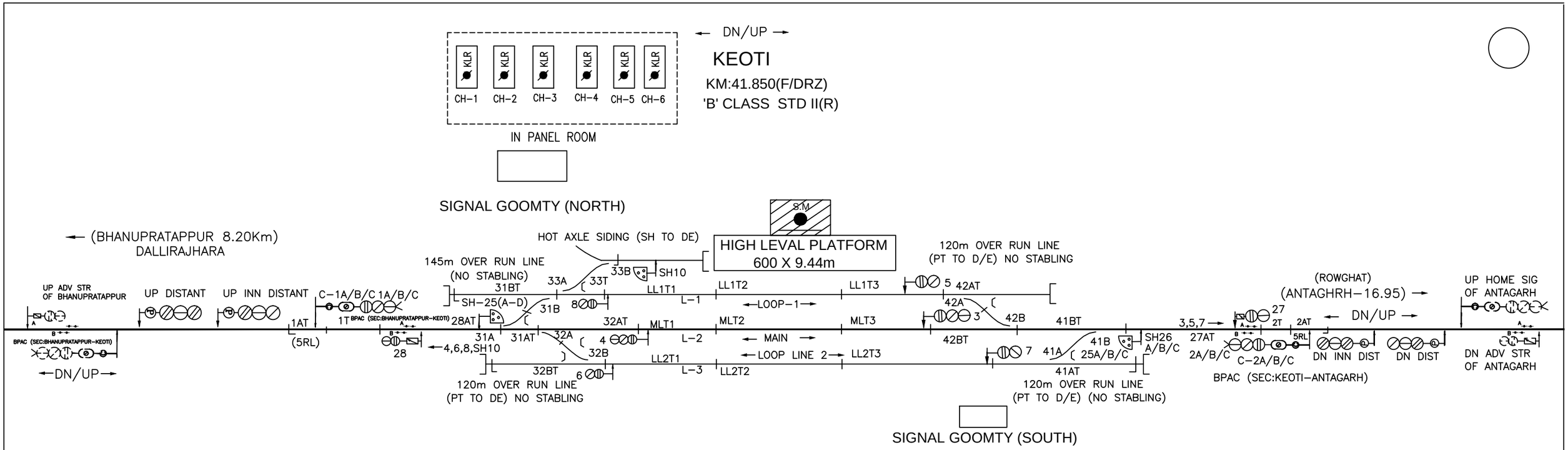

CONTROL PANEL IN SM's OFFICE

TOTAL NO. OF CONTROLS-1 TO 60

SIGNAL & SLOT CONTROLS-1 TO 30 (SPACES - 9,11-24,29.30)

POINT CONTROLS-31 TO 50 (SPACES-34 TO & 43 TO 50)

OTHER CONTROLS-51 TO 60 (SPACES-51 TO 60)

SI/R/KETI/19

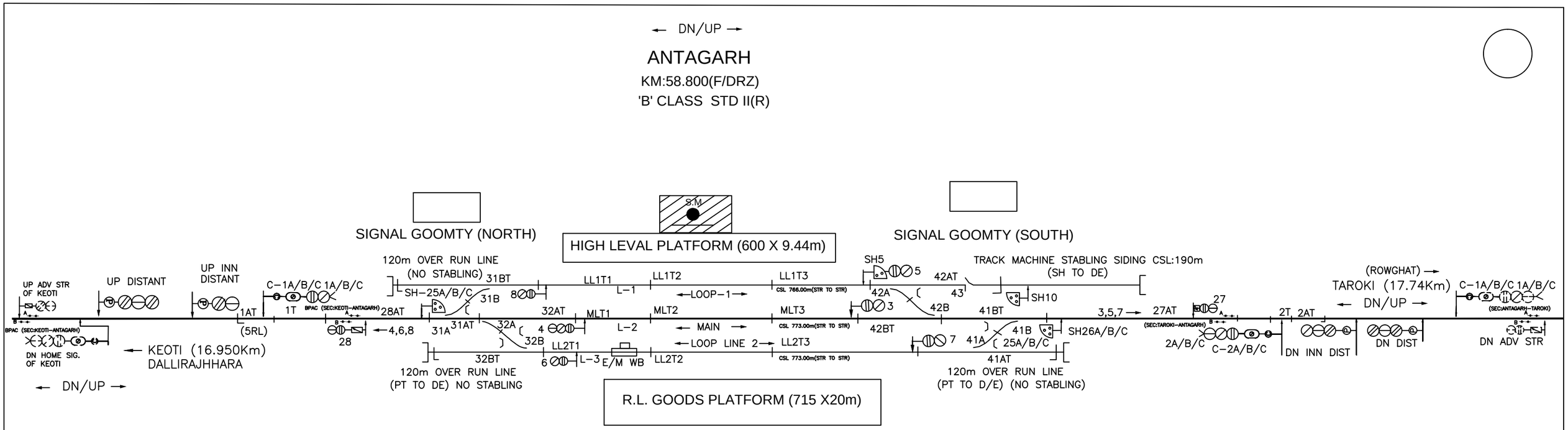

CONTROL PANEL IN SM's OFFICE

TOTAL NO. OF CONTROLS–1 TO 60

SIGNAL & SLOT CONTROLS–1 TO 30 (SPACES – 2,9,11–24,29.30)

POINT CONTROLS–31 TO 50 (SPACES–33 TO 40, 43 TO 50)

OTHER CONTROLS–51 TO 60 (SPACES–51 TO 60)

SI–S.I./R/ANTAGARH/19
(PHASE–I)

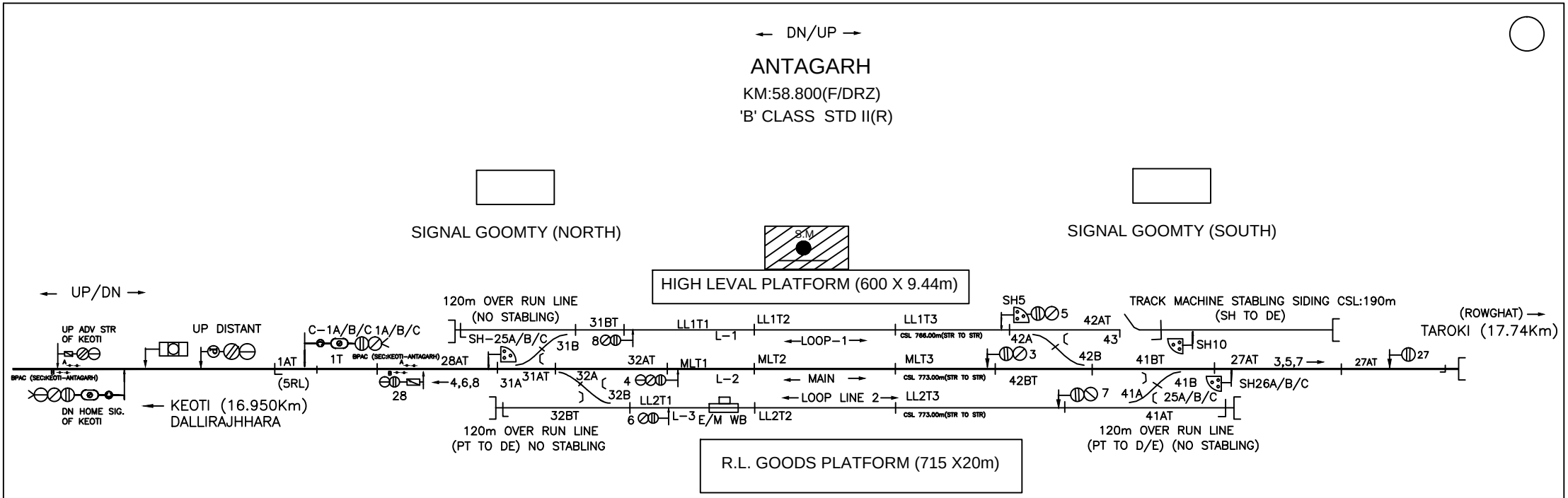

CONTROL PANEL IN SM's OFFICE

TOTAL NO. OF CONTROLS–1 TO 60

SIGNAL & SLOT CONTROLS–1 TO 30 (SPACES – 2,9,11–24,29.30)

POINT CONTROLS–31 TO 50 (SPACES–33 TO 40, 43 TO 50)

OTHER CONTROLS–51 TO 60 (SPACES–51 TO 60)

SI–S.I./R/ANTAGARH/19
(PHASE–I)

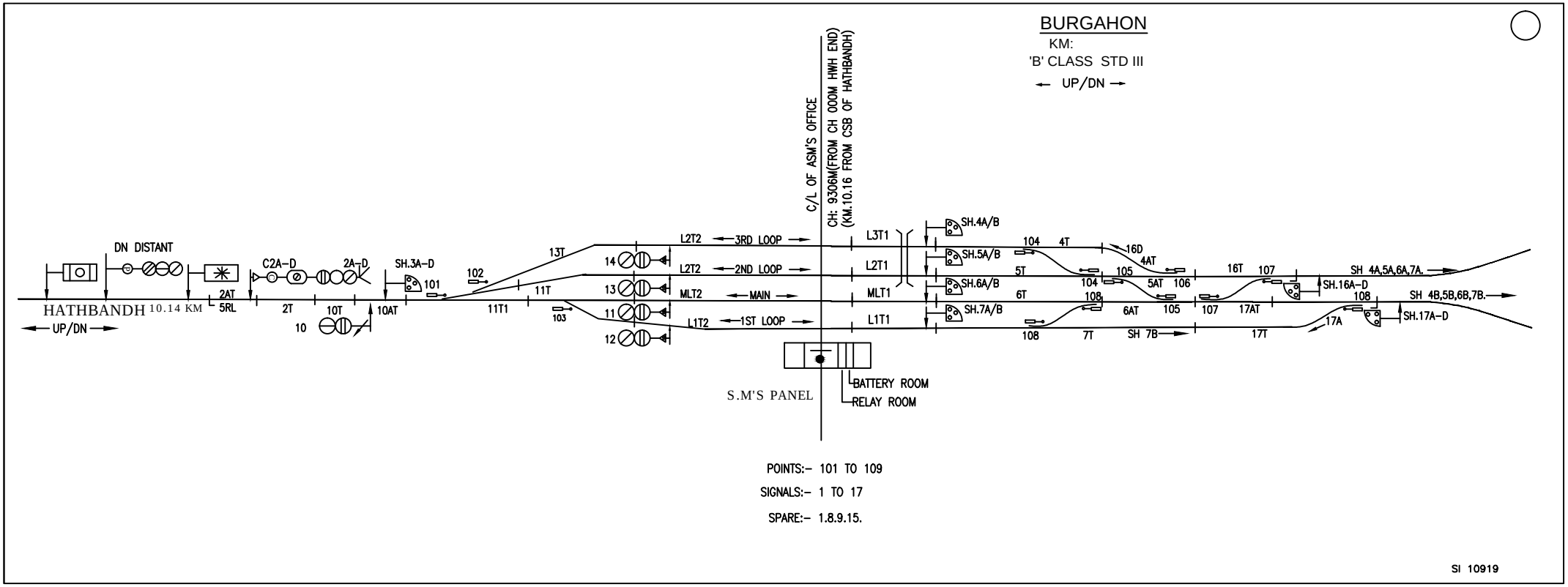

POINTS:– 101 TO 109

SIGNALS:– 1 TO 17

SPARE:– 1.8.9.15.

SI 10919

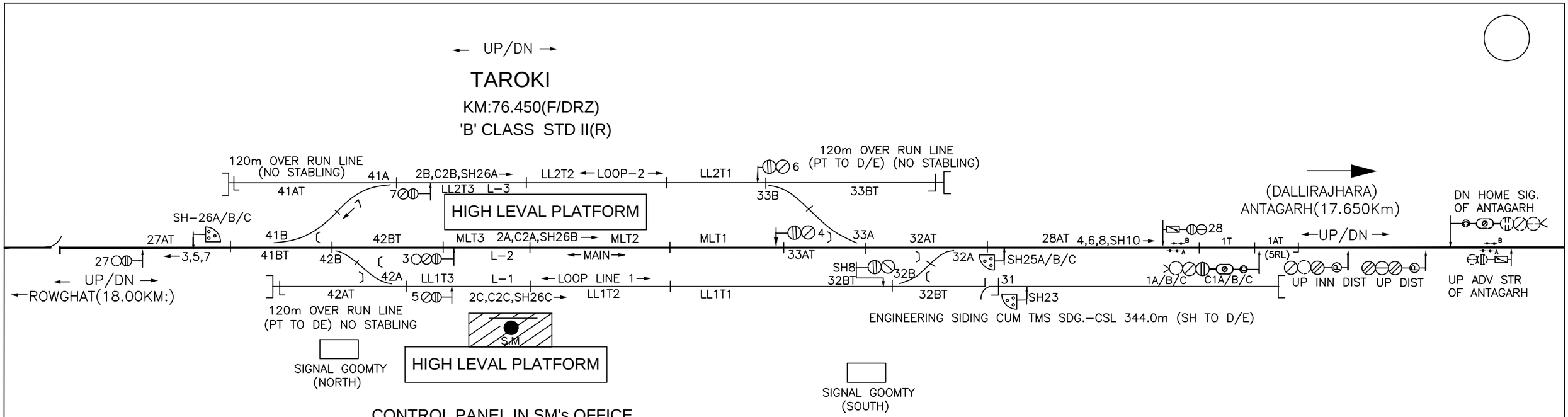

CONTROL PANEL IN SM's OFFICE

TOTAL NO. OF CONTROLS−1 TO 60

SIGNAL & SLOT CONTROLS−1 TO 30 (SPACES −9.11−24,29,30)

POINT CONTROLS−31 TO 50 (SPACES−36 TO 40, 43 TO 50)

OTHER CONTROLS−51 TO 60 (SPACES−51 TO 60)

SI−S.I./R/TAROKI/21

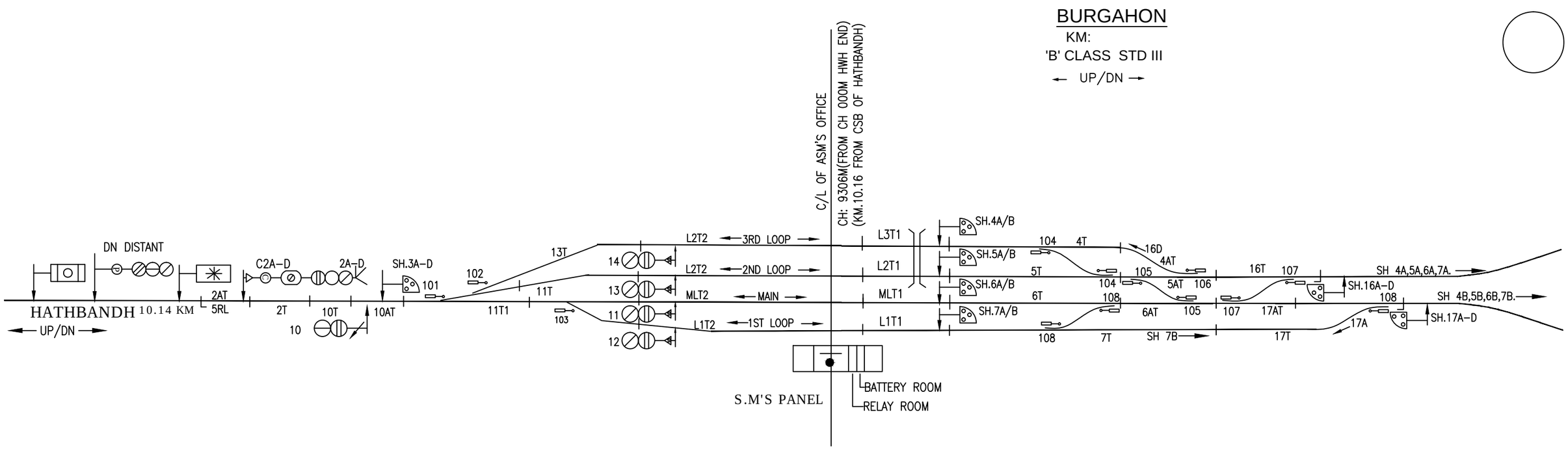

POINTS:– 101 TO 109

SIGNALS:– 1 TO 17

SPARE:– 1.8.9.15.

SI 10919

JAMUL BLOCK HUT

'B' CLASS STD II(R)

← UP/DN →

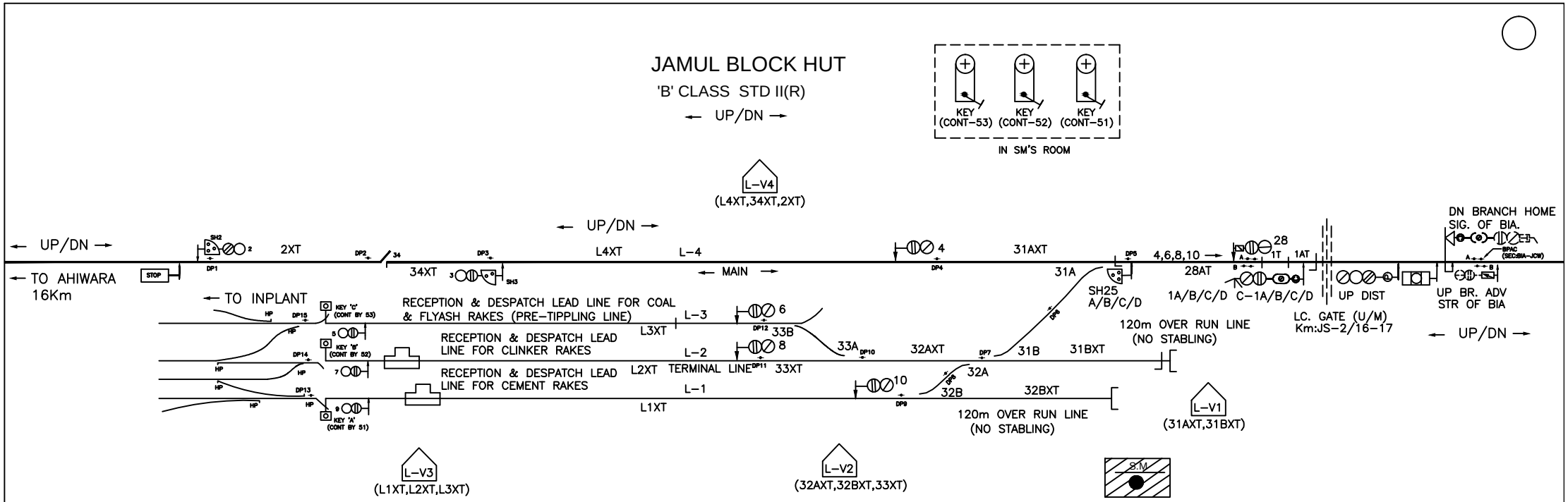

CONTROL PANEL IN SM's VDU

TOTAL NO. OF CONTROLS-1 TO 60

SIGNAL & SLOT CONTROLS-1 TO 30 (SPACES-11 TO 24,26,27,29,30)

POINT CONTROLS-31 TO 50 (SPACES-35 TO 50)

SIDING POINT CONTROL-51 TO 55 (SPACES-54 TO 55)

L.C. GATE CONTROL-56 TO 60 (SPACES-56 TO 60)

SI/R/JCW/17

JAMUL BLOCK HUT

'B' CLASS STD II(R)

← UP/DN →

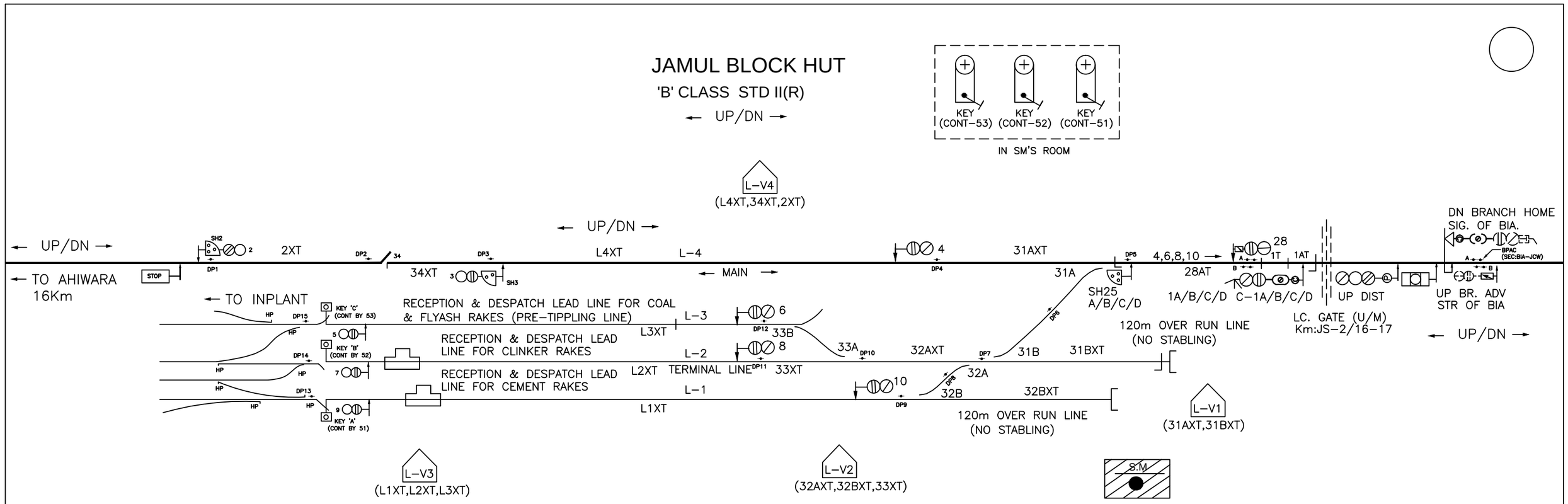

CONTROL PANEL IN SM's VDU

TOTAL NO. OF CONTROLS-1 TO 60

SIGNAL & SLOT CONTROLS-1 TO 30 (SPACES-11 TO 24,26,27,29,30)

POINT CONTROLS-31 TO 50 (SPACES-35 TO 50)

SIDING POINT CONTROL-51 TO 55 (SPACES-54 TO 55)

L.C. GATE CONTROL-56 TO 60 (SPACES-56 TO 60)

SI/R/JCW/17

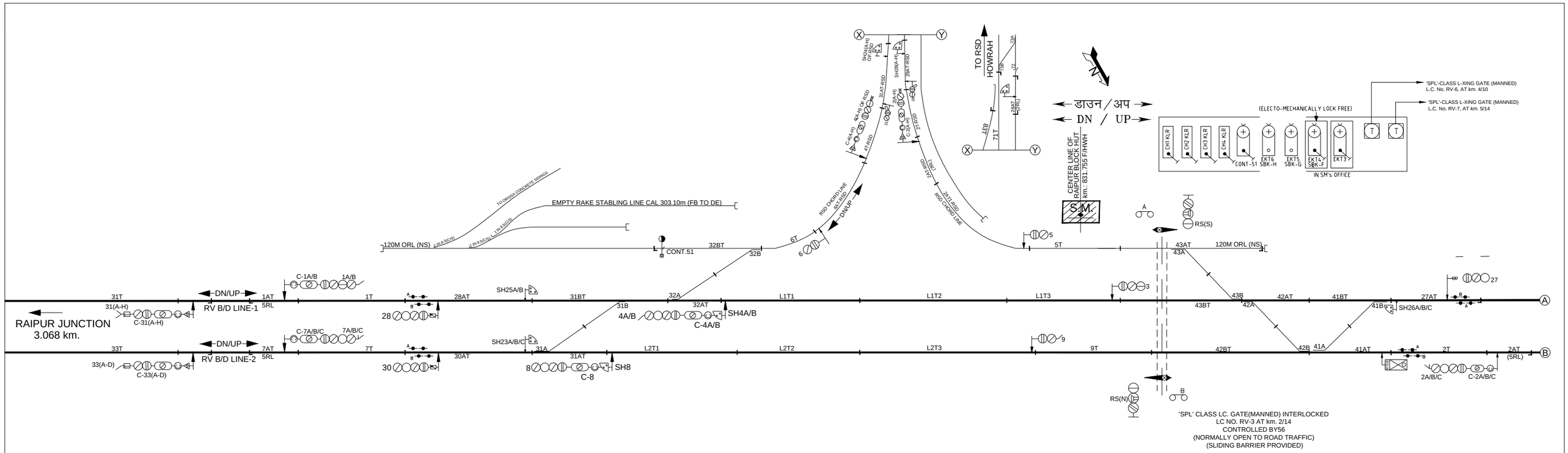

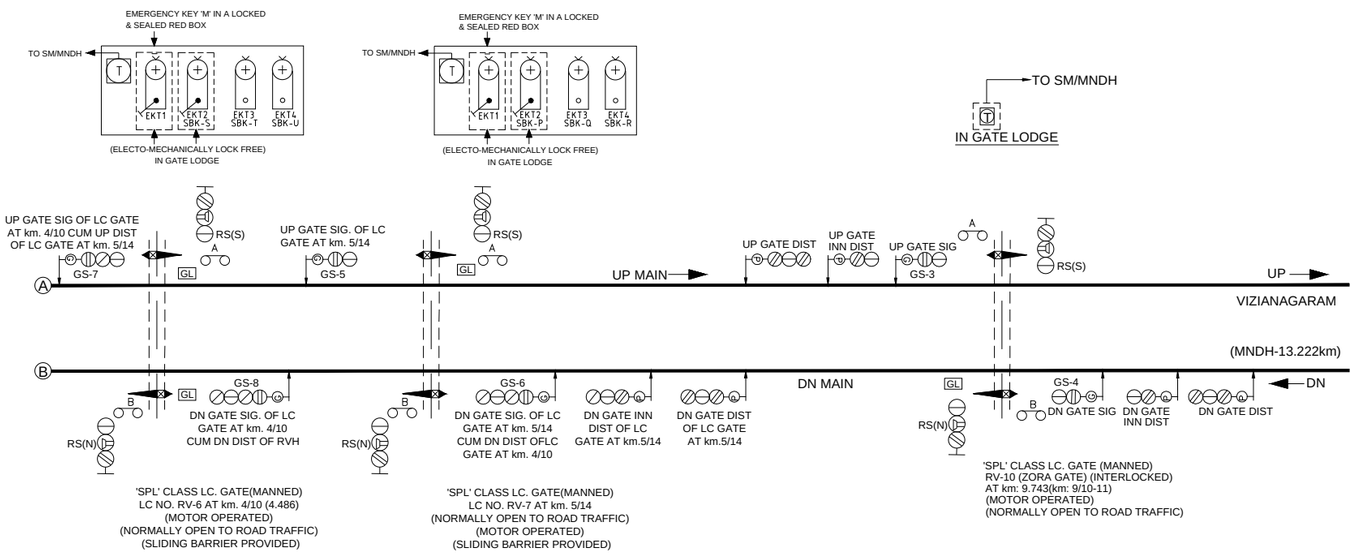

MINI SIP

RAIPUR BLOCK HUT

km : 831.755 FROM HWH
km : 3.068 FROM RAIPUR

CODE- RVH (PHASE-II) CLASS-'B'

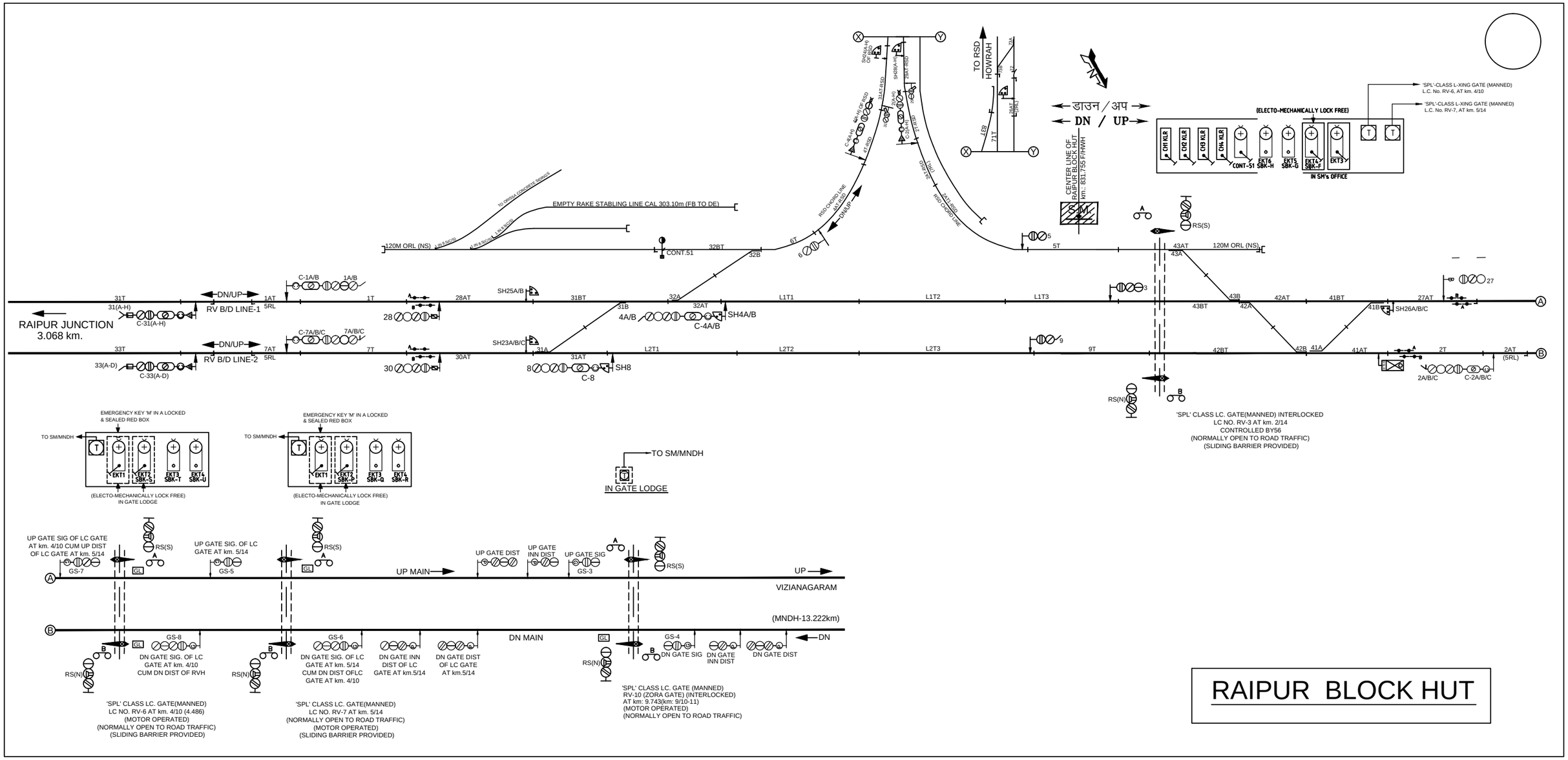

RAIPUR BLOCK HUT

RAIPUR STORE DEPOT YARD

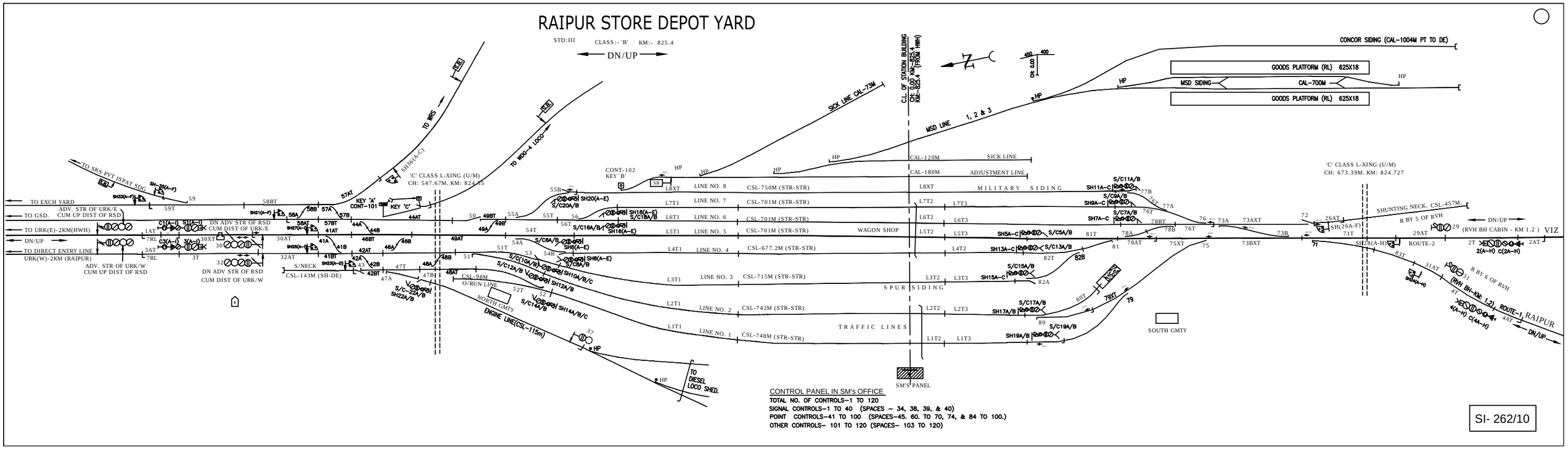

CONTROL PANEL IN SM's OFFICE

TOTAL NO. OF CONTROLS-1 TO 120

SIGNAL CONTROLS-1 TO 40 (SPACES - 34, 38, 39, & 40)

POINT CONTROLS-41 TO 100 (SPACES-45. 60. TO 70, 74, & 84 TO 100.)

OTHER CONTROLS- 101 TO 120 (SPACES- 103 TO 120)

SI- 262/10

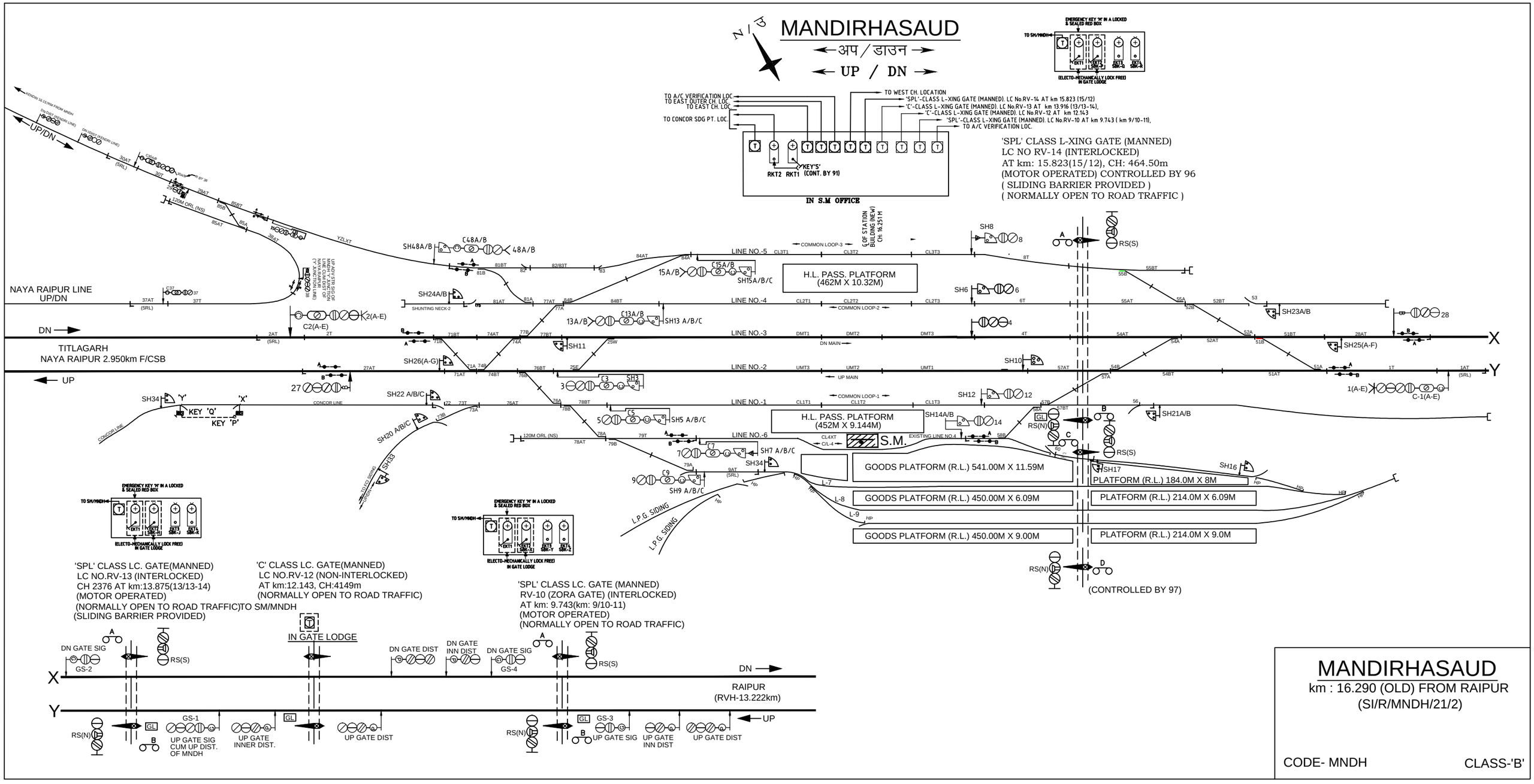
MANDIRHASAUD
अप / डाउन
UP / DN
TO A/C VERIFICATION LOC
TO EAST OUTER CH. LOC.
TO EAST CH. LOC.
TO CONCOR SDG PT. LOC.
TO WEST CH. LOCATION
'SPL'-CLASS L-XING GATE (MANNED). LC No.RV-14 AT km 15.823 (15/12)
'C'-CLASS L-XING GATE (MANNED). LC No.RV-13 AT km 13.916 (13/13-14),
'C'-CLASS L-XING GATE (MANNED). LC No.RV-12 AT km 12.143
'SPL'-CLASS L-XING GATE (MANNED). LC No.RV-10 AT km 9.743 (km 9/10-11),
TO A/C VERIFICATION LOC.
RKT2 RKT1
KEY'S' (CONT. BY 91)
IN S.M OFFICE
EMERGENCY KEY 'M' IN A LOCKED & SEALED RED BOX
TO SM/MNDH
(ELECTO-MECHANICALLY LOCK FREE) IN GATE LODGE
'SPL' CLASS L-XING GATE (MANNED)
LC NO RV-14 (INTERLOCKED)
AT km: 15.823(15/12), CH: 464.50m
(MOTOR OPERATED) CONTROLLED BY 96
(SLIDING BARRIER PROVIDED)
(NORMALLY OPEN TO ROAD TRAFFIC)
UP/DN
NAYA RAIPUR LINE UP/DN
DN
TITLAGARH
NAYA RAIPUR 2.950km F/CSB
UP
LINE NO.-5
LINE NO.-4
LINE NO.-3
LINE NO.-2
LINE NO.-1
LINE NO.-6
COMMON LOOP-3
COMMON LOOP-2
DN MAIN
UP MAIN
COMMON LOOP-1
H.L. PASS. PLATFORM (462M X 10.32M)
H.L. PASS. PLATFORM (452M X 9.144M)
S.M.
GOODS PLATFORM (R.L.) 541.00M X 11.59M
PLATFORM (R.L.) 184.0M X 8M
GOODS PLATFORM (R.L.) 450.00M X 6.09M
PLATFORM (R.L.) 214.0M X 6.09M
GOODS PLATFORM (R.L.) 450.00M X 9.00M
PLATFORM (R.L.) 214.0M X 9.0M
L.P.G. SIDING
CONCOR LINE
(CONTROLLED BY 97)
'SPL' CLASS LC. GATE(MANNED)
LC NO.RV-13 (INTERLOCKED)
CH 2376 AT km:13.875(13/13-14)
(MOTOR OPERATED)
(NORMALLY OPEN TO ROAD TRAFFIC)
(SLIDING BARRIER PROVIDED)
'C' CLASS LC. GATE(MANNED)
LC NO.RV-12 (NON-INTERLOCKED)
AT km:12.143, CH:4149m
(NORMALLY OPEN TO ROAD TRAFFIC)
'SPL' CLASS LC. GATE (MANNED)
RV-10 (ZORA GATE) (INTERLOCKED)
AT km: 9.743(km: 9/10-11)
(MOTOR OPERATED)
(NORMALLY OPEN TO ROAD TRAFFIC)
IN GATE LODGE
DN GATE SIG
DN GATE DIST
DN GATE INN DIST
UP GATE SIG CUM UP DIST. OF MNDH
UP GATE INNER DIST.
UP GATE DIST
UP GATE SIG
UP GATE INN DIST
RAIPUR
(RVH-13.222km)
MANDIRHASAUD
km : 16.290 (OLD) FROM RAIPUR
(SI/R/MNDH/21/2)
CODE- MNDH
CLASS-'B'

RAIPUR STORE DEPOT YARD

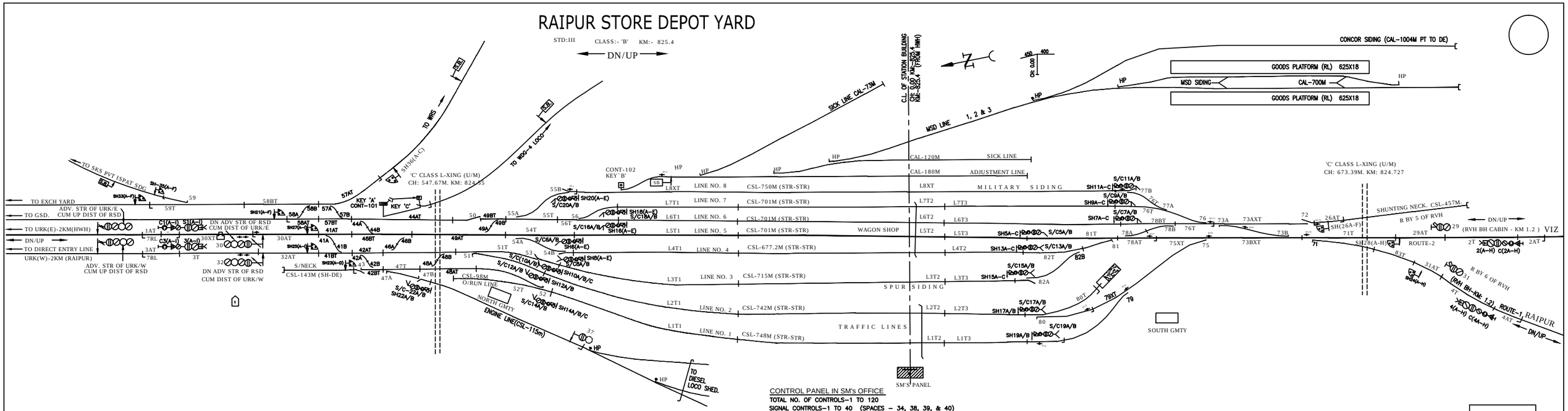

CONTROL PANEL IN SM's OFFICE

TOTAL NO. OF CONTROLS–1 TO 120
SIGNAL CONTROLS–1 TO 40 (SPACES – 34, 38, 39, & 40)
POINT CONTROLS–41 TO 100 (SPACES–45. 60. TO 70, 74, & 84 TO 100.)
OTHER CONTROLS– 101 TO 120 (SPACES– 103 TO 120)

SI- 262/10

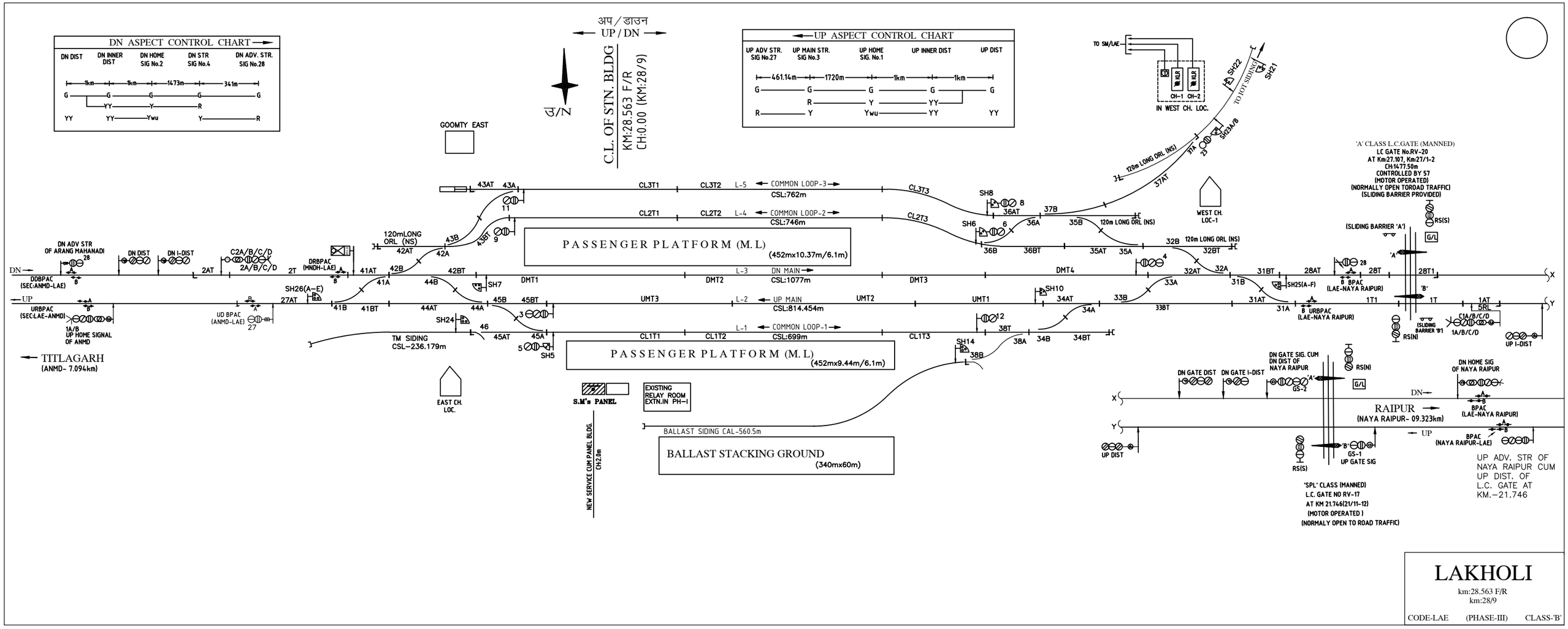
DN ASPECT CONTROL CHART
DN DIST
DN INNER DIST
DN HOME SIG No.2
DN STR SIG No.4
DN ADV. STR. SIG No.28
अप / डाउन
UP / DN
N/P
C.L. OF STN. BLDG
KM:28.563 F/R
CH:0.00 (KM:28/9)
UP ASPECT CONTROL CHART
UP ADV STR. SIG No.27
UP MAIN STR. SIG No.3
UP HOME SIG. No.1
UP INNER DIST
UP DIST
GOOMTY EAST
TO SM/LAE
IN WEST CH. LOC.
TO LOT SIDING
120m LONG ORL (NS)
WEST CH. LOC-1
'A' CLASS L.C.GATE (MANNED)
LC GATE No.RV-20
AT Km:27.107, Km:27/1-2
CH:14.77.50m
CONTROLLED BY 57
(MOTOR OPERATED)
(NORMALLY OPEN TORDAD TRAFFIC)
(SLIDING BARRIER PROVIDED)
(SLIDING BARRIER 'A')
COMMON LOOP-3
CSL:762m
COMMON LOOP-2
CSL:746m
PASSENGER PLATFORM (M.L)
(452mx10.37m/6.1m)
DN MAIN
CSL:1077m
UP MAIN
CSL:814.454m
COMMON LOOP-1
CSL:699m
PASSENGER PLATFORM (M.L)
(452mx9.44m/6.1m)
DN ADV STR OF ARANG MAHANADI
DDBPAC (SEC:ANMD-LAE)
URBPAC (SEC:LAE-ANMD)
1A/B UP HOME SIGNAL OF ANMD
TITLAGARH (ANMD- 7.094km)
UD BPAC (ANMD-LAE)
TM SIDING CSL-236.179m
EAST CH. LOC.
S.M's PANEL
EXISTING RELAY ROOM EXTN.IN PH-I
NEW SERVICE CUM PANEL BLDG. CH:2.0m
BALLAST SIDING CAL-560.5m
BALLAST STACKING GROUND
(340mx60m)
DRBPAC (MNDH-LAE)
BPAC (LAE-NAYA RAIPUR)
URBPAC (LAE-NAYA RAIPUR)
DN GATE SIG. CUM DN DIST OF NAYA RAIPUR
DN GATE DIST
DN GATE I-DIST
DN HOME SIG OF NAYA RAIPUR
RAIPUR (NAYA RAIPUR- 09.323km)
BPAC (LAE-NAYA RAIPUR)
BPAC (NAYA RAIPUR-LAE)
UP DIST
UP GATE SIG
'SPL' CLASS (MANNED)
L.C. GATE NO RV-17
AT KM 21.746(21/11-12)
(MOTOR OPERATED)
(NORMALY OPEN TO ROAD TRAFFIC)
UP ADV. STR OF NAYA RAIPUR CUM UP DIST. OF L.C. GATE AT KM.-21.746
LAKHOLI
km:28.563 F/R
km:28/9
CODE-LAE
(PHASE-III)
CLASS-'B'

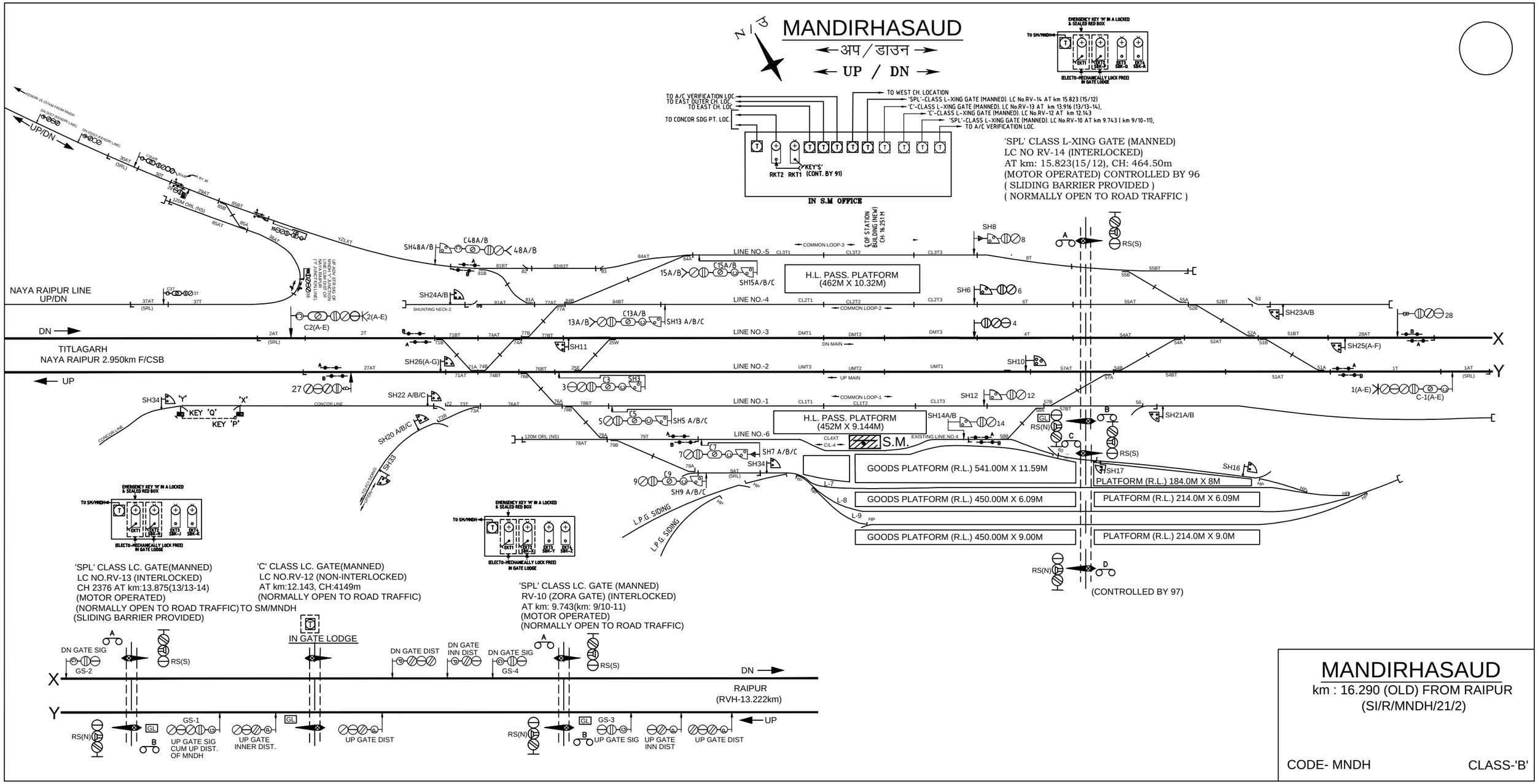

MANDIRHASAUD

km : 16.290 (OLD) FROM RAIPUR
(SI/R/MNDH/21/2)

CODE- MNDH

CLASS-'B'

'P' - CABIN

KM:–851.923 (NEW)
STD.–III CLASS:- B

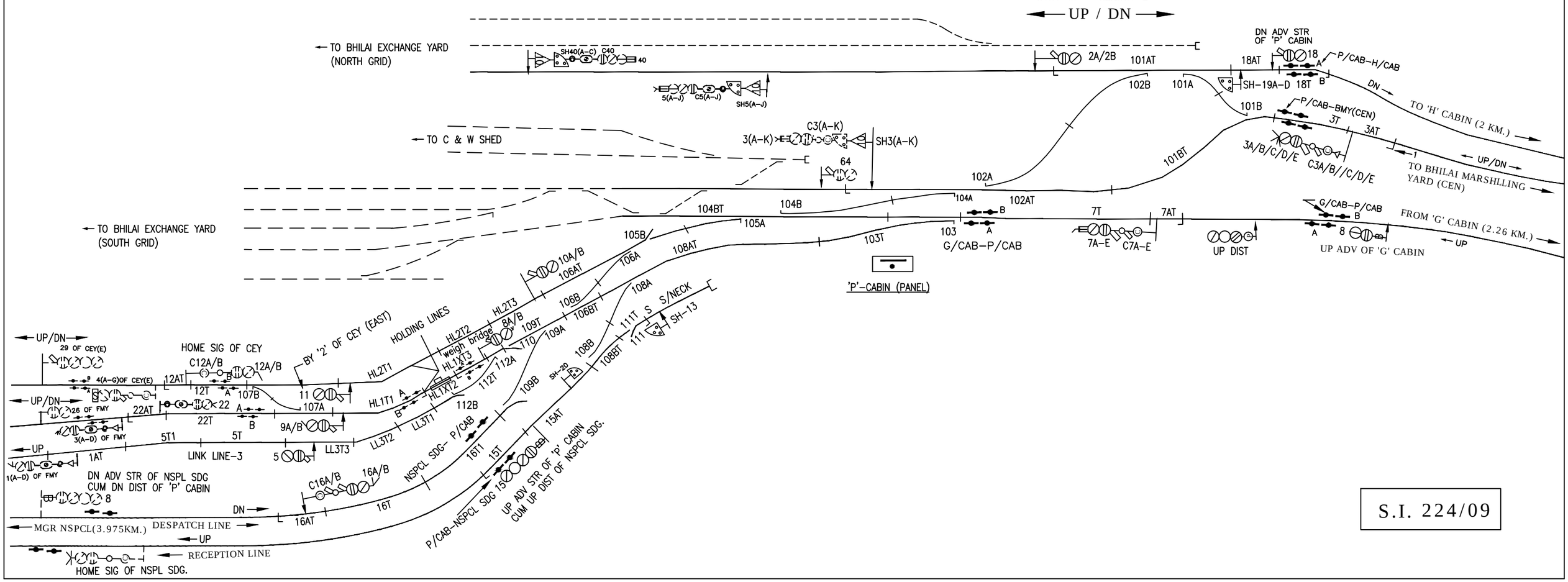

S.I. 224/09

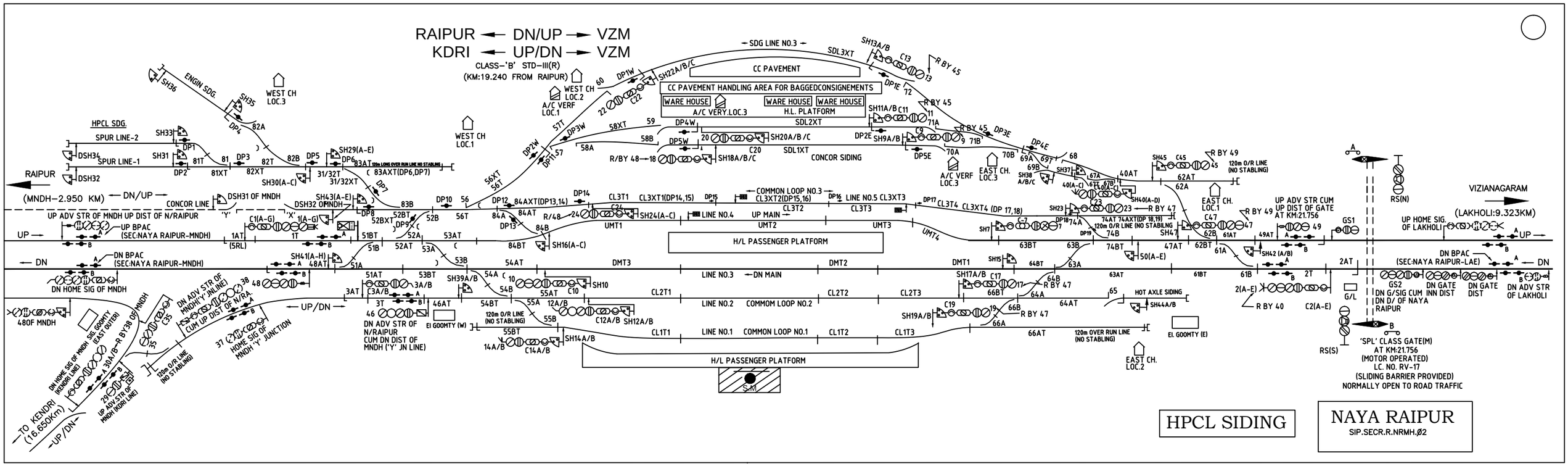
RAIPUR ← DN/UP → VZM
KDRI ← UP/DN → VZM
CLASS-'B' STD-III(R)
(KM:19.240 FROM RAIPUR)
SDG LINE NO.3
CC PAVEMENT
CC PAVEMENT HANDLING AREA FOR BAGGEDCONSIGNEMENTS
WARE HOUSE
A/C VERY.LOC.3
H.L. PLATFORM
WEST CH LOC.3
WEST CH LOC.2
A/C VERF LOC.1
WEST CH LOC.1
ENGIN SDG.
HPCL SDG.
SPUR LINE-2
SPUR LINE-1
RAIPUR
(MNDH-2.950 KM) ← DN/UP →
CONCOR LINE
DSH31 OF MNDH
UP ADV STR OF MNDH UP DIST OF N/RAIPUR
UP BPAC (SEC:NAYA RAIPUR-MNDH)
DN BPAC (SEC:NAYA RAIPUR-MNDH)
DN HOME SIG OF MNDH
480F MNDH
DN ADV STR OF N/RAIPUR CUM DN DIST OF MNDH ('Y' JN LINE)
DN ADV STR OF MNDH('Y' JN.LINE) CUM UP DIST OF N/RA.
HOME SIG OF MNDH 'Y' JUNCTION
TO KENDRI (16.650Km)
UP/DN
DN HOME SIG OF MNDH (KENDRI LINE)
UP ADV.STR OF MNDH (KORI LINE)
SIG GOOMTY (EAST OUTER)
120m O/R LINE (NO STABLING)
120m LONG OVER RUN LINE NO STABLING
COMMON LOOP NO.3
LINE NO.5
LINE NO.4
UP MAIN
LINE NO.3
DN MAIN
LINE NO.2
COMMOM LOOP NO.2
LINE NO.1
COMMON LOOP NO.1
H/L PASSENGER PLATFORM
CONCOR SIDING
EAST CH. LOC.3
EAST CH. LOC.1
EAST CH. LOC.2
A/C VERF LOC.3
HOT AXLE SIDING
El GOOMTY (W)
El. GOOMTY (E)
120m O/R LINE (NO STABLING)
120m OVER RUN LINE (NO STABLING)
UP ADV STR CUM UP DIST OF GATE AT KM:21.756
VIZIANAGARAM
(LAKHOLI:9.323KM)
UP HOME SIG. OF LAKHOLI
DN BPAC (SEC:NAYA RAIPUR-LAE)
DN ADV STR OF LAKHOLI
DN GATE INN DIST
DN GATE DIST
DN G/SIG CUM DN D/ OF NAYA RAIPUR
'SPL' CLASS GATE(M) AT KM:21.756 (MOTOR OPERATED) LC. NO. RV-17 (SLIDING BARRIER PROVIDED) NORMALLY OPEN TO ROAD TRAFFIC
HPCL SIDING
NAYA RAIPUR
SIP.SECR.R.NRMH.Ø2

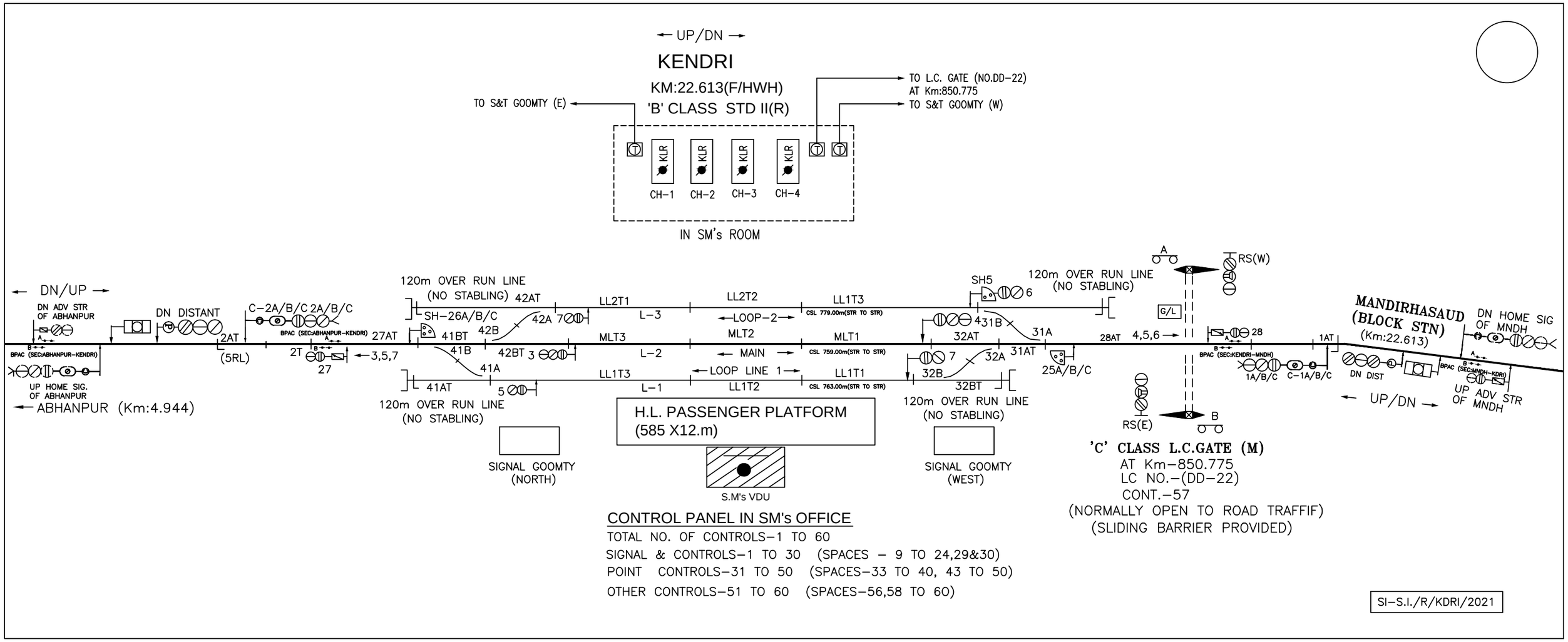
← UP/DN →
KENDRI
KM:22.613(F/HWH)
'B' CLASS STD II(R)
TO S&T GOOMTY (E)
TO L.C. GATE (NO.DD-22)
AT Km:850.775
TO S&T GOOMTY (W)
KLR
CH-1
CH-2
CH-3
CH-4
IN SM's ROOM
← DN/UP →
DN ADV STR OF ABHANPUR
DN DISTANT
C-2A/B/C 2A/B/C
BPAC (SEC:ABHANPUR-KENDRI)
2AT
(5RL)
2T
27
3,5,7
27AT
UP HOME SIG. OF ABHANPUR
← ABHANPUR (Km:4.944)
120m OVER RUN LINE
(NO STABLING)
SH-26A/B/C
42AT
42A
7
41BT
42B
41B
42BT
3
41A
41AT
5
LL2T1
L-3
MLT3
L-2
LL1T3
L-1
LL2T2
← LOOP-2 →
MLT2
← MAIN →
LL1T2
← LOOP LINE 1 →
LL1T3
CSL 779.00m(STR TO STR)
MLT1
CSL 759.00m(STR TO STR)
LL1T1
CSL 763.00m(STR TO STR)
SH5
6
4
31B
32AT
7
32A
32B
32BT
31A
31AT
25A/B/C
28AT
4,5,6 →
G/L
A
B
RS(W)
RS(E)
28
1AT
BPAC (SEC:KENDRI-MNDH)
1A/B/C
C-1A/B/C
MANDIRHASAUD
(BLOCK STN)
(Km:22.613)
DN HOME SIG OF MNDH
DN DIST
BPAC (SEC:MNDH-KDRI)
UP ADV STR OF MNDH
← UP/DN →
H.L. PASSENGER PLATFORM
(585 X12.m)
SIGNAL GOOMTY
(NORTH)
SIGNAL GOOMTY
(WEST)
S.M's VDU
'C' CLASS L.C.GATE (M)
AT Km-850.775
LC NO.-(DD-22)
CONT.-57
(NORMALLY OPEN TO ROAD TRAFFIF)
(SLIDING BARRIER PROVIDED)
CONTROL PANEL IN SM's OFFICE
TOTAL NO. OF CONTROLS-1 TO 60
SIGNAL & CONTROLS-1 TO 30 (SPACES - 9 TO 24,29&30)
POINT CONTROLS-31 TO 50 (SPACES-33 TO 40, 43 TO 50)
OTHER CONTROLS-51 TO 60 (SPACES-56,58 TO 60)
SI-S.I./R/KDRI/2021

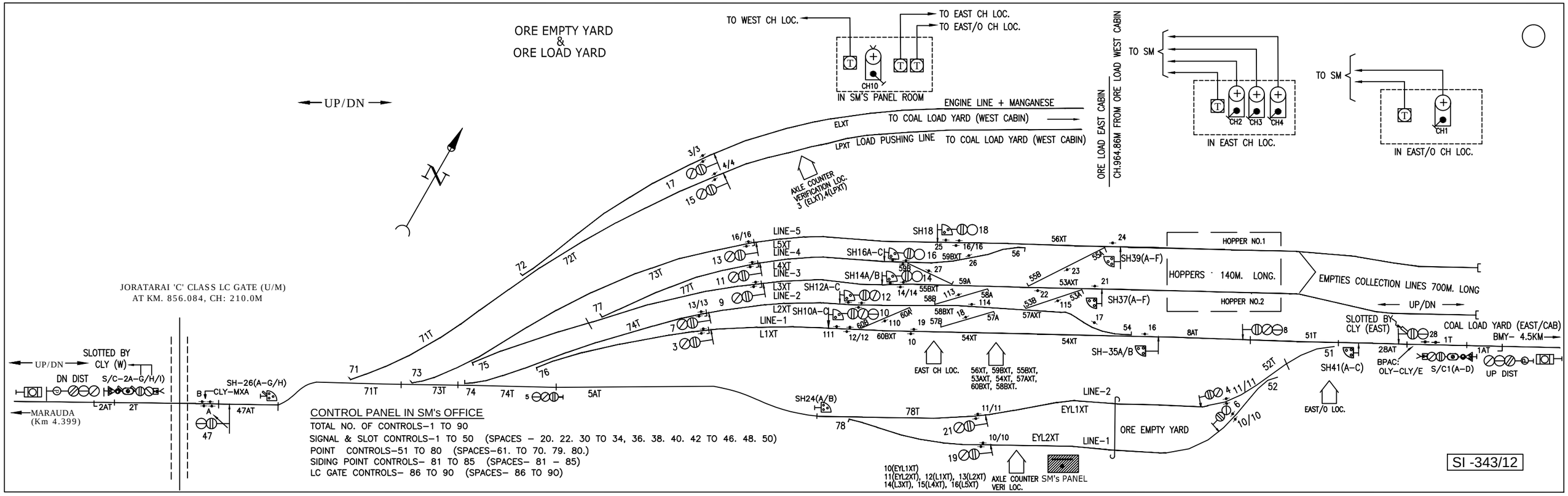

CONTROL PANEL IN SM's OFFICE

TOTAL NO. OF CONTROLS–1 TO 90

SIGNAL & SLOT CONTROLS–1 TO 50 (SPACES – 20. 22. 30 TO 34, 36. 38. 40. 42 TO 46. 48. 50)

POINT CONTROLS–51 TO 80 (SPACES–61. TO 70. 79. 80.)

SIDING POINT CONTROLS– 81 TO 85 (SPACES– 81 – 85)

LC GATE CONTROLS– 86 TO 90 (SPACES– 86 TO 90)

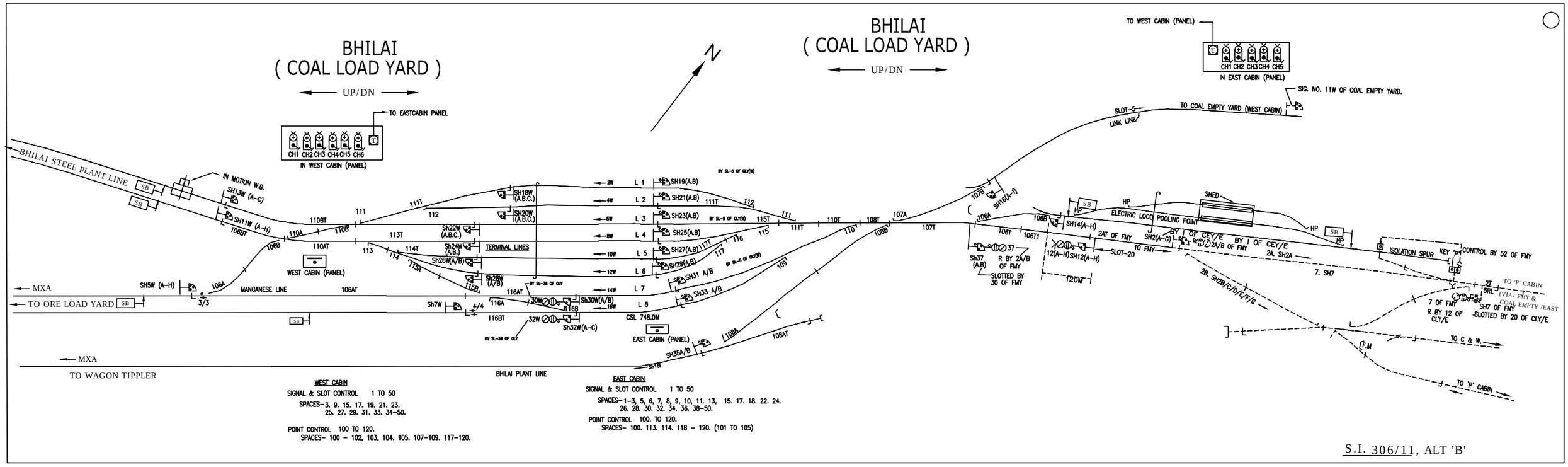

S.I. 306/11, ALT 'B'

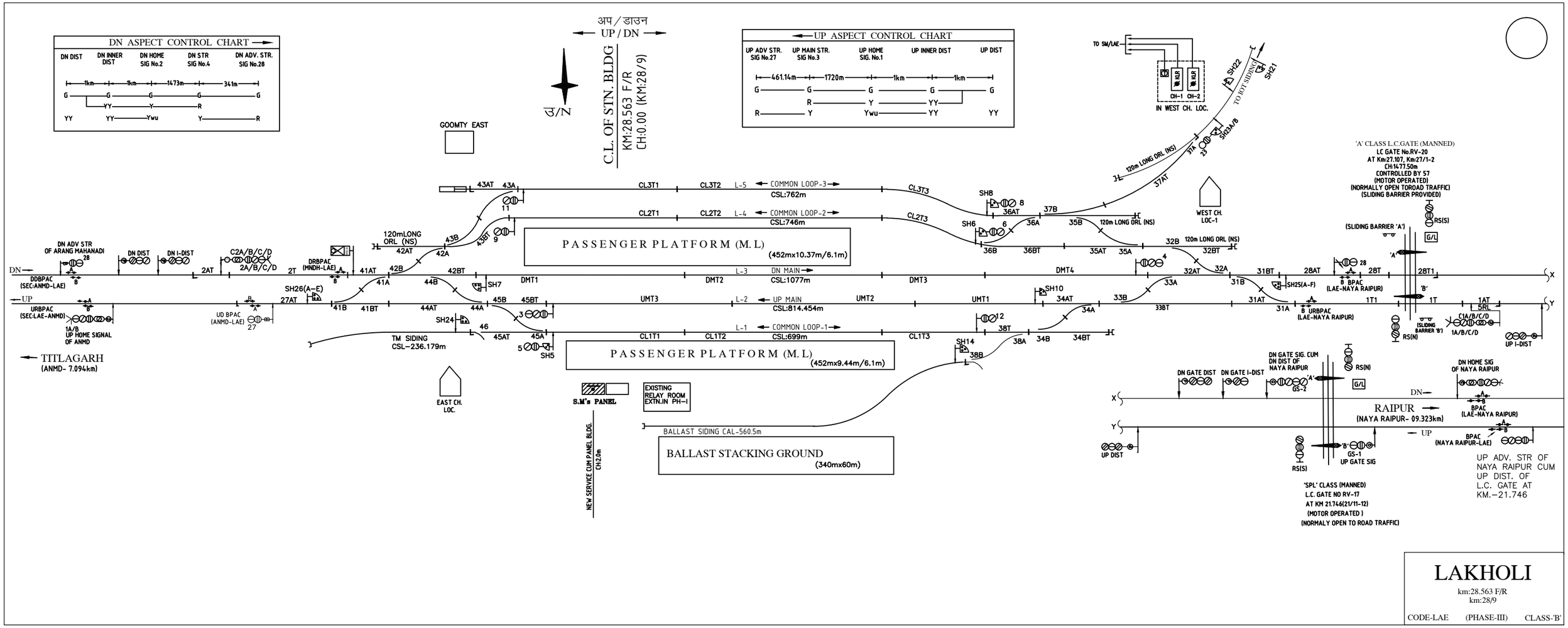
DN ASPECT CONTROL CHART
DN DIST
DN INNER DIST
DN HOME SIG No.2
DN STR SIG No.4
DN ADV. STR. SIG No.28
1km
1km
1473m
341m
अप / डाउन
UP / DN
उ/N
C.L. OF STN. BLDG
KM:28.563 F/R
CH:0.00 (KM:28/9)
UP ASPECT CONTROL CHART
UP ADV STR. SIG No.27
UP MAIN STR. SIG No.3
UP HOME SIG. No.1
UP INNER DIST
UP DIST
461.14m
1720m
1km
1km
TO SM/LAE
CH-1 CH-2
IN WEST CH. LOC.
SH22
SH21
TO LOT SIDING
SH23A/B
120m LONG ORL (NS)
WEST CH. LOC-1
'A' CLASS L.C.GATE (MANNED)
LC GATE No.RV-20
AT Km:27.107, Km:27/1-2
CH:14.77.50m
CONTROLLED BY 57
(MOTOR OPERATED)
(NORMALLY OPEN TOROAD TRAFFIC)
(SLIDING BARRIER PROVIDED)
RS(S)
G/L
(SLIDING BARRIER 'A')
GOOMTY EAST
CL3T1
CL3T2
L-5
COMMON LOOP-3
CSL:762m
CL3T3
CL2T1
CL2T2
L-4
COMMON LOOP-2
CSL:746m
CL2T3
PASSENGER PLATFORM (M.L)
(452mx10.37m/6.1m)
120mLONG ORL (NS)
DN ADV STR OF ARANG MAHANADI
DN DIST
DN I-DIST
C2A/B/C/D
2A/B/C/D
DRBPAC (MNDH-LAE)
DDBPAC (SEC:ANMD-LAE)
DN
L-3
DN MAIN
CSL:1077m
DMT1
DMT2
DMT3
DMT4
SH7
SH8
SH6
SH10
SH25(A-F)
BPAC (LAE-NAYA RAIPUR)
UP
SH26(A-E)
URBPAC (SEC:LAE-ANMD)
1A/B UP HOME SIGNAL OF ANMD
UD BPAC (ANMD-LAE)
L-2
UP MAIN
CSL:814.454m
UMT3
UMT2
UMT1
URBPAC (LAE-NAYA RAIPUR)
SH24
TM SIDING CSL-236.179m
L-1
COMMON LOOP-1
CSL:699m
CL1T1
CL1T2
CL1T3
SH14
SH5
TITLAGARH
(ANMD- 7.094km)
PASSENGER PLATFORM (M.L)
(452mx9.44m/6.1m)
EAST CH. LOC.
S.M's PANEL
EXISTING RELAY ROOM EXTN.IN PH-I
NEW SERVICE CUM PANEL BLDG. CH:2.0m
BALLAST SIDING CAL-560.5m
BALLAST STACKING GROUND
(340mx60m)
DN GATE SIG. CUM DN DIST OF NAYA RAIPUR
DN GATE DIST
DN GATE I-DIST
GS-2
DN HOME SIG OF NAYA RAIPUR
RAIPUR
(NAYA RAIPUR- 09.323km)
BPAC (NAYA RAIPUR-LAE)
UP DIST
GS-1 UP GATE SIG
'SPL' CLASS (MANNED)
L.C. GATE NO RV-17
AT KM 21.746(21/11-12)
(MOTOR OPERATED)
(NORMALY OPEN TO ROAD TRAFFIC)
UP ADV. STR OF NAYA RAIPUR CUM UP DIST. OF L.C. GATE AT KM.-21.746
LAKHOLI
km:28.563 F/R
km:28/9
CODE-LAE
(PHASE-III)
CLASS-'B'

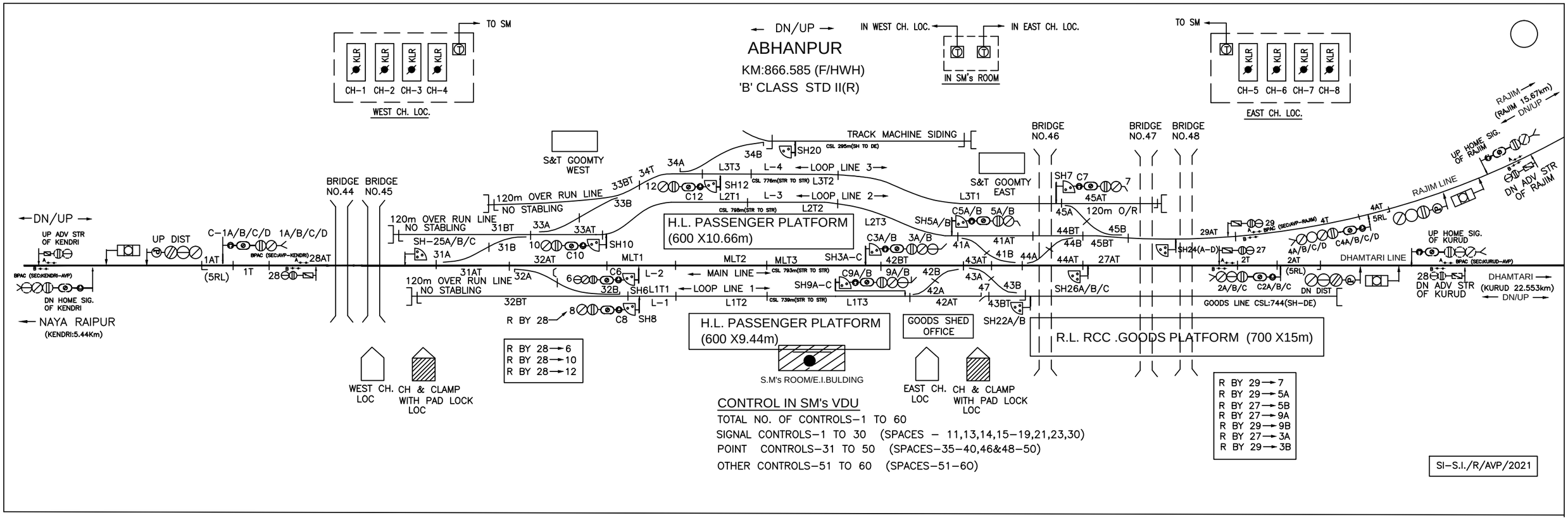
ABHANPUR
KM:866.585 (F/HWH)
'B' CLASS STD II(R)
← DN/UP →
TO SM
CH-1 CH-2 CH-3 CH-4
WEST CH. LOC.
IN WEST CH. LOC.
IN EAST CH. LOC.
IN SM's ROOM
CH-5 CH-6 CH-7 CH-8
EAST CH. LOC.
S&T GOOMTY WEST
S&T GOOMTY EAST
TRACK MACHINE SIDING
BRIDGE NO.44
BRIDGE NO.45
BRIDGE NO.46
BRIDGE NO.47
BRIDGE NO.48
120m OVER RUN LINE
NO STABLING
H.L. PASSENGER PLATFORM (600 X10.66m)
H.L. PASSENGER PLATFORM (600 X9.44m)
R.L. RCC .GOODS PLATFORM (700 X15m)
GOODS SHED OFFICE
S.M's ROOM/E.I.BULDING
MAIN LINE
LOOP LINE 1
LOOP LINE 2
LOOP LINE 3
GOODS LINE CSL:744(SH-DE)
DHAMTARI LINE
RAJIM LINE
UP ADV STR OF KENDRI
UP DIST
DN HOME SIG. OF KENDRI
NAYA RAIPUR (KENDRI:5.44Km)
UP HOME SIG. OF KURUD
DN ADV STR OF KURUD
DHAMTARI (KURUD 22.553km)
UP HOME SIG. OF RAJIM
DN ADV STR OF RAJIM
RAJIM (RAJIM 15.67km)
DN DIST
WEST CH. LOC
CH & CLAMP WITH PAD LOCK LOC
EAST CH. LOC
R BY 28→6
R BY 28→10
R BY 28→12
R BY 29→7
R BY 29→5A
R BY 27→5B
R BY 27→9A
R BY 29→9B
R BY 27→3A
R BY 29→3B
CONTROL IN SM's VDU
TOTAL NO. OF CONTROLS-1 TO 60
SIGNAL CONTROLS-1 TO 30 (SPACES - 11,13,14,15-19,21,23,30)
POINT CONTROLS-31 TO 50 (SPACES-35-40,46&48-50)
OTHER CONTROLS-51 TO 60 (SPACES-51-60)
SI-S.I./R/AVP/2021

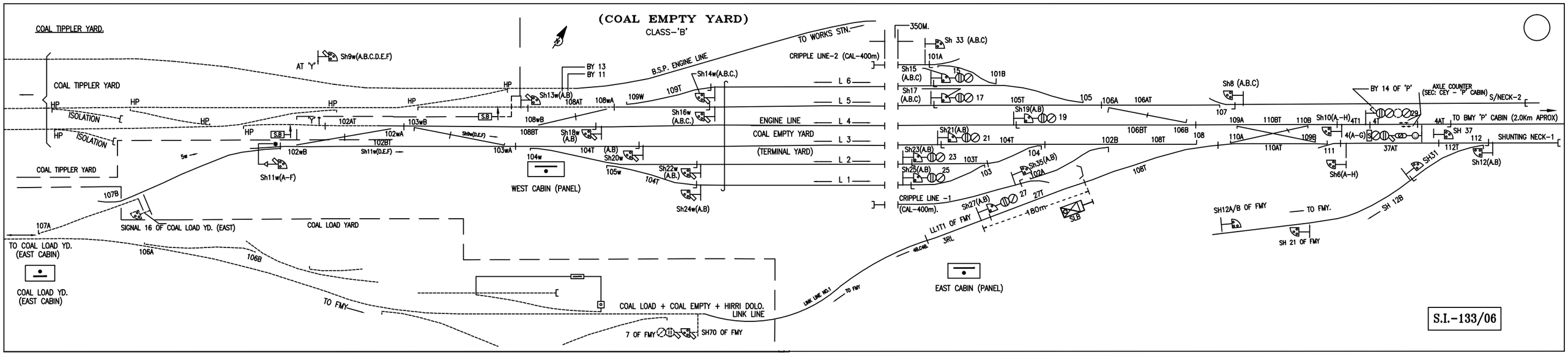
(COAL EMPTY YARD)
CLASS-'B'
COAL TIPPLER YARD.
COAL TIPPLER YARD
ISOLATION
AT 'Y'
Sh9w(A.B.C.D.E.F)
Sh13w(A.B)
BY 13
BY 11
B.S.P. ENGINE LINE
Sh14w(A.B.C.)
Sh16w (A.B.C.)
Sh18w (A.B)
Sh20w (A.B)
Sh22w (A.B.)
Sh24w(A.B)
Sh11w(A-F)
Sh11w(D.E.F)
Sh9w(D.E.F)
WEST CABIN (PANEL)
SIGNAL 16 OF COAL LOAD YD. (EAST)
COAL LOAD YARD
TO COAL LOAD YD. (EAST CABIN)
COAL LOAD YD. (EAST CABIN)
TO FMY
TO WORKS STN.
CRIPPLE LINE-2 (CAL-400m)
ENGINE LINE
COAL EMPTY YARD
(TERMINAL YARD)
L 6
L 5
L 4
L 3
L 2
L 1
CRIPPLE LINE -1 (CAL-400m).
350M.
Sh 33 (A.B.C)
Sh15 (A.B.C)
Sh17 (A.B.C)
Sh19(A.B)
Sh21(A.B)
Sh23(A.B)
Sh25(A.B)
Sh35(A.B)
Sh27(A.B)
LL1T1 OF FMY
180m
SLB
EAST CABIN (PANEL)
COAL LOAD + COAL EMPTY + HIRRI DOLO. LINK LINE
LINK LINE NO.1
TO FMY
7 OF FMY
SH70 OF FMY
Sh8 (A.B.C)
BY 14 OF 'P'
AXLE COUNTER (SEC: CEY - 'P' CABIN)
S/NECK-2
TO BMY 'P' CABIN (2.0Km APROX)
SH 37
SHUNTING NECK-1
Sh10(A-H)
4(A-G)
Sh6(A-H)
SH31
Sh12(A.B)
SH12A/B OF FMY
TO FMY.
SH 21 OF FMY
SH 12B

S.I.-133/06

'P' - CABIN

KM:–851.923 (NEW)
STD.–III CLASS:- B

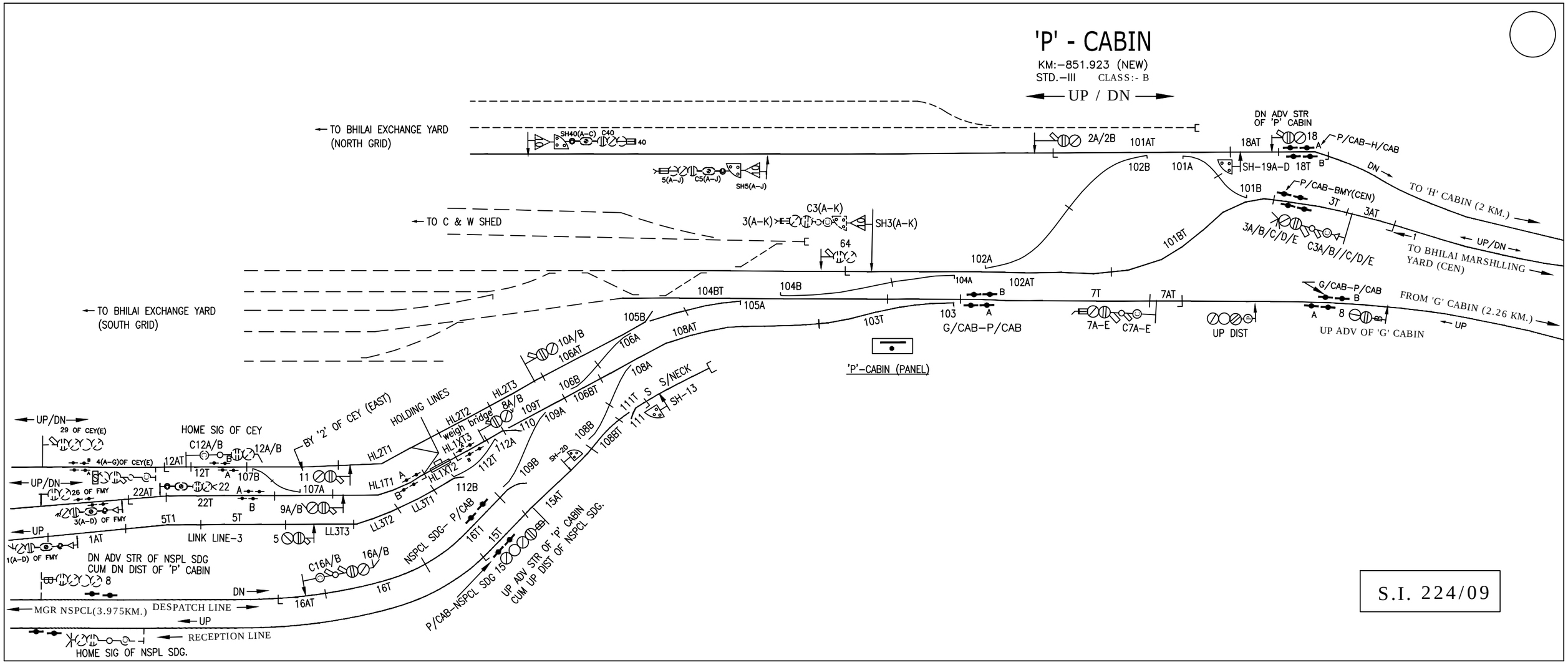

S.I. 224/09

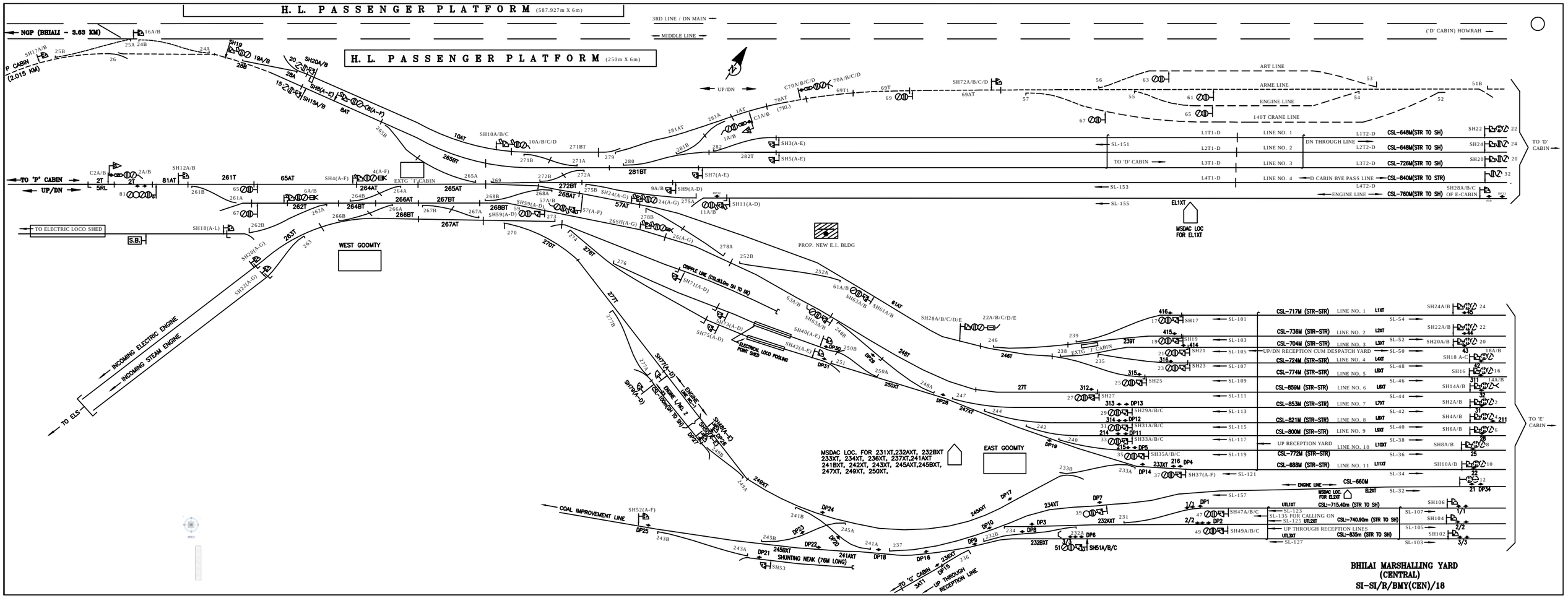

BHILAI MARSHALLING YARD (CENTRAL)

SI-SI/R/BMY(CEN)/18

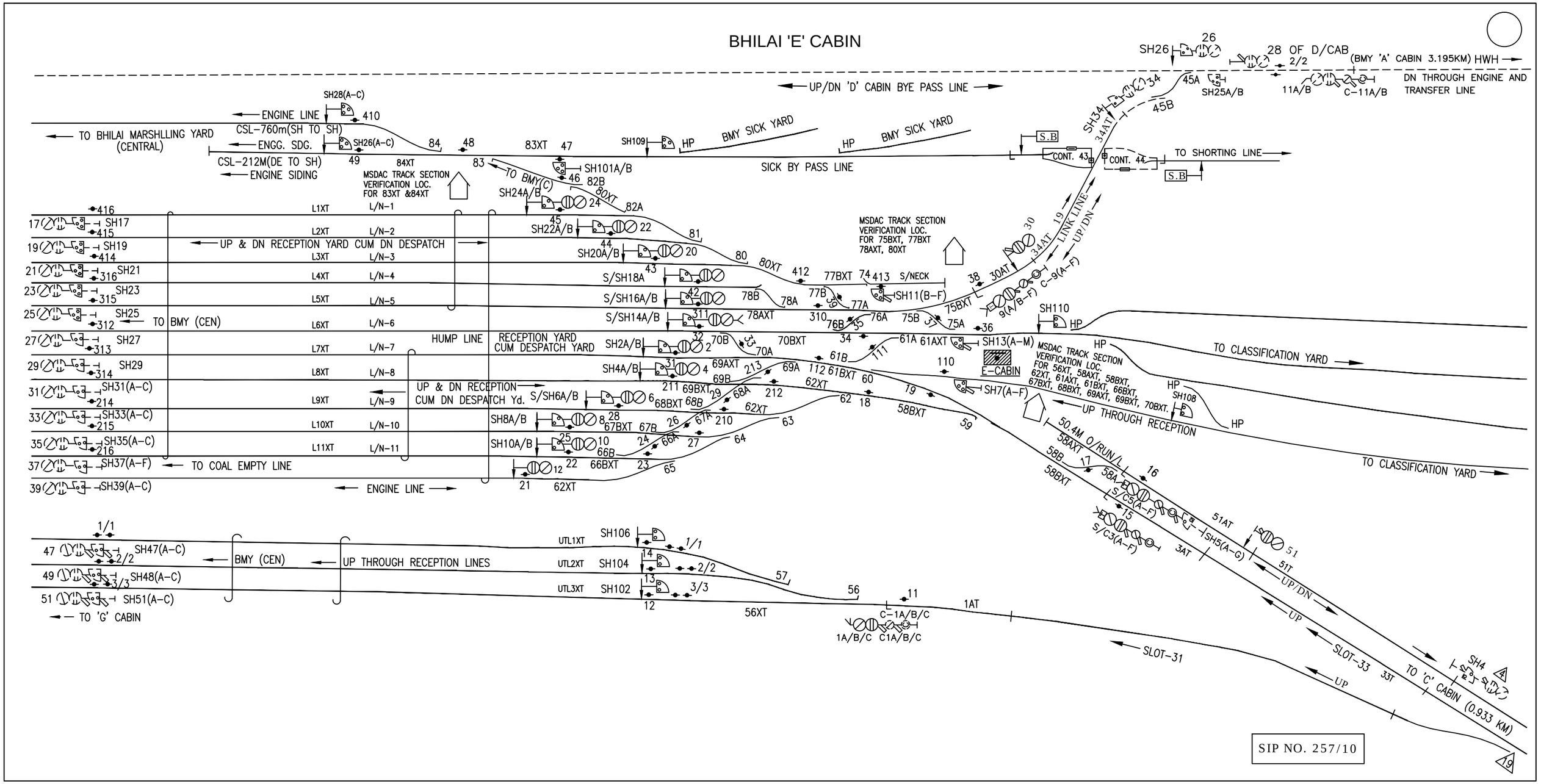
BHILAI 'E' CABIN
UP/DN 'D' CABIN BYE PASS LINE
SH26
26
28 OF D/CAB
2/2
(BMY 'A' CABIN 3.195KM) HWH
DN THROUGH ENGINE AND TRANSFER LINE
SH28(A-C)
ENGINE LINE
410
TO BHILAI MARSHLLING YARD (CENTRAL)
CSL-760m(SH TO SH)
ENGG. SDG.
SH26(A-C)
CSL-212M(DE TO SH)
ENGINE SIDING
84
48
83XT
47
SH109
HP
BMY SICK YARD
HP
BMY SICK YARD
S.B
CONT. 43
CONT. 44
TO SHORTING LINE
S.B
SH34
34AT
34
45A
SH25A/B
45B
11A/B
C-11A/B
MSDAC TRACK SECTION VERIFICATION LOC. FOR 83XT &84XT
84XT
49
83
TO BMY(C)
SH101A/B
46
82B
80XT
SH24A/B
24
82A
SICK BY PASS LINE
416
L1XT
L/N-1
17
SH17
415
L2XT
L/N-2
SH22A/B
22
45
81
19
SH19
414
UP & DN RECEPTION YARD CUM DN DESPATCH
L3XT
L/N-3
SH20A/B
20
44
80
80XT
MSDAC TRACK SECTION VERIFICATION LOC. FOR 75BXT, 77BXT 78AXT, 80XT
LINK LINE
UP/DN
30
34AT
19
21
SH21
316
L4XT
L/N-4
S/SH18A
43
412
77BXT
74
413
S/NECK
38
30AT
C-9(A-F)
23
SH23
315
L5XT
L/N-5
S/SH16A/B
42
78B
78A
77B
77A
SH11(B-F)
75BXT
9(A/B-F)
25
SH25
312
TO BMY (CEN)
L6XT
L/N-6
S/SH14A/B
311
78AXT
310
76B
76A
75B
75A
36
SH110
HP
27
SH27
313
L7XT
L/N-7
HUMP LINE
RECEPTION YARD CUM DESPATCH YARD
SH2A/B
32
2
70B
70BXT
34
61A
61AXT
SH13(A-M)
HP
TO CLASSIFICATION YARD
29
SH29
314
L8XT
L/N-8
SH4A/B
31
4
69AXT
70A
61B
111
110
E-CABIN
MSDAC TRACK SECTION VERIFICATION LOC. FOR 56XT, 58AXT, 58BXT, 62XT, 61AXT, 61BXT, 66BXT, 67BXT, 68BXT, 69AXT, 69BXT, 70BXT.
31
SH31(A-C)
214
L9XT
L/N-9
UP & DN RECEPTION CUM DN DESPATCH Yd.
S/SH6A/B
6
68BXT
69B
211
69BXT
213
69A
112
61BXT
60
62XT
SH7(A-F)
HP
SH10B
HP
68A
212
68B
29
62
18
19
58BXT
59
UP THROUGH RECEPTION
33
SH33(A-C)
215
L10XT
L/N-10
SH8A/B
8
28
67BXT
67B
26
61A
210
63
HP
35
SH35(A-C)
216
L11XT
L/N-11
SH10A/B
25
10
66B
24
66A
27
64
50.4M O/RUN/L
58AXT
58B
17
58A
16
TO CLASSIFICATION YARD
37
SH37(A-F)
TO COAL EMPTY LINE
22
66BXT
23
65
39
SH39(A-C)
ENGINE LINE
12
21
62XT
S/C5(A-F)
15
S/C3(A-F)
51AT
SH5(A-G)
51
51T
3AT
UP/DN
UP
1/1
47
SH47(A-C)
2/2
BMY (CEN)
UP THROUGH RECEPTION LINES
UTL1XT
SH106
1/1
14
UTL2XT
SH104
2/2
49
SH48(A-C)
3/3
UTL3XT
SH102
13
3/3
12
57
56
11
51
SH51(A-C)
TO 'G' CABIN
56XT
C-1A/B/C
1A/B/C
C1A/B/C
1AT
SLOT-31
UP
SLOT-33
33T
TO 'C' CABIN (0.933 KM)
SH4
4
19

SIP NO. 257/10

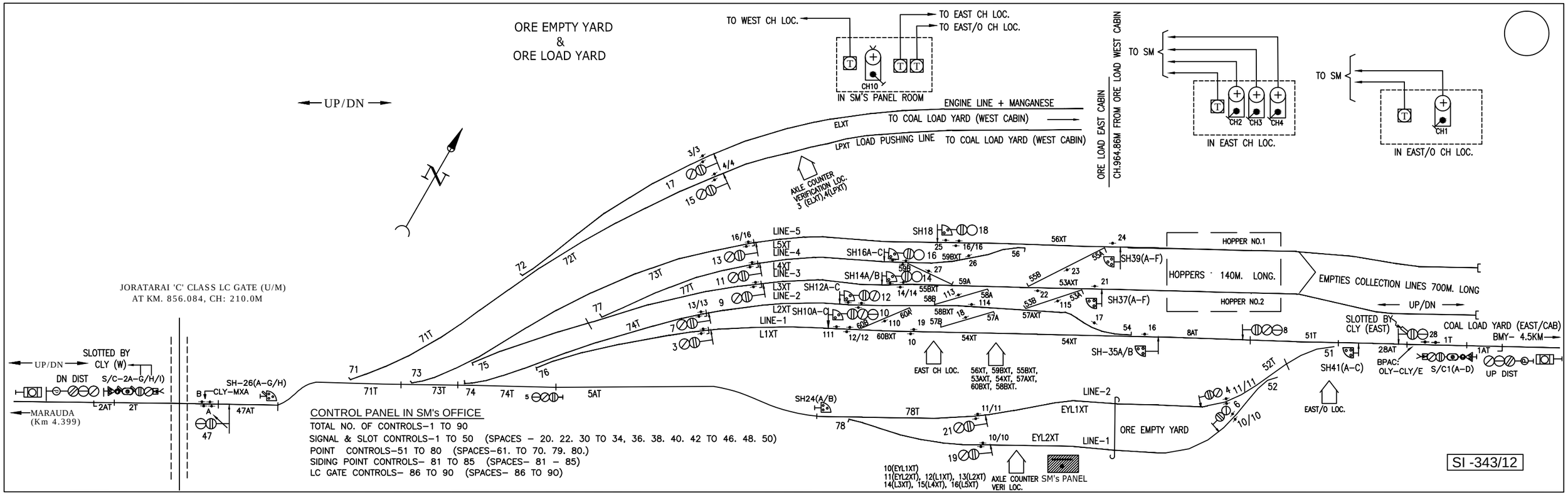
ORE EMPTY YARD
&
ORE LOAD YARD
UP/DN
TO WEST CH LOC.
TO EAST CH LOC.
TO EAST/O CH LOC.
CH10
IN SM'S PANEL ROOM
ENGINE LINE + MANGANESE
ELXT
TO COAL LOAD YARD (WEST CABIN)
LPXT
LOAD PUSHING LINE
TO COAL LOAD YARD (WEST CABIN)
ORE LOAD EAST CABIN
CH.964.86M FROM ORE LOAD WEST CABIN
TO SM
CH2
CH3
CH4
IN EAST CH LOC.
CH1
IN EAST/O CH LOC.
AXLE COUNTER VERIFICATION LOC. 3 (ELXT),4(LPXT)
JORATARAI 'C' CLASS LC GATE (U/M)
AT KM. 856.084, CH: 210.0M
LINE-5
L5XT
LINE-4
L4XT
LINE-3
L3XT
LINE-2
L2XT
LINE-1
L1XT
SH18
SH16A-C
SH14A/B
SH12A-C
SH10A-C
SH39(A-F)
SH37(A-F)
SH-35A/B
HOPPER NO.1
HOPPERS 140M. LONG.
HOPPER NO.2
EMPTIES COLLECTION LINES 700M. LONG
UP/DN
SLOTTED BY CLY (EAST)
COAL LOAD YARD (EAST/CAB)
BMY- 4.5KM
BPAC: OLY-CLY/E
S/C1(A-D)
UP DIST
SH41(A-C)
EAST/O LOC.
EAST CH LOC.
56XT, 59BXT, 55BXT, 53AXT, 54XT, 57AXT, 60BXT, 58BXT.
SLOTTED BY CLY (W)
UP/DN
DN DIST
S/C-2A-G/H/I)
MARAUDA
(Km 4.399)
SH-26(A-G/H)
CLY-MXA
SH24(A/B)
LINE-2
EYL1XT
ORE EMPTY YARD
EYL2XT
LINE-1
10(EYL1XT)
11(EYL2XT), 12(L1XT), 13(L2XT)
14(L3XT), 15(L4XT), 16(L5XT)
AXLE COUNTER VERI LOC.
SM's PANEL
CONTROL PANEL IN SM's OFFICE
TOTAL NO. OF CONTROLS-1 TO 90
SIGNAL & SLOT CONTROLS-1 TO 50 (SPACES - 20. 22. 30 TO 34, 36. 38. 40. 42 TO 46. 48. 50)
POINT CONTROLS-51 TO 80 (SPACES-61. TO 70. 79. 80.)
SIDING POINT CONTROLS- 81 TO 85 (SPACES- 81 - 85)
LC GATE CONTROLS- 86 TO 90 (SPACES- 86 TO 90)
SI -343/12

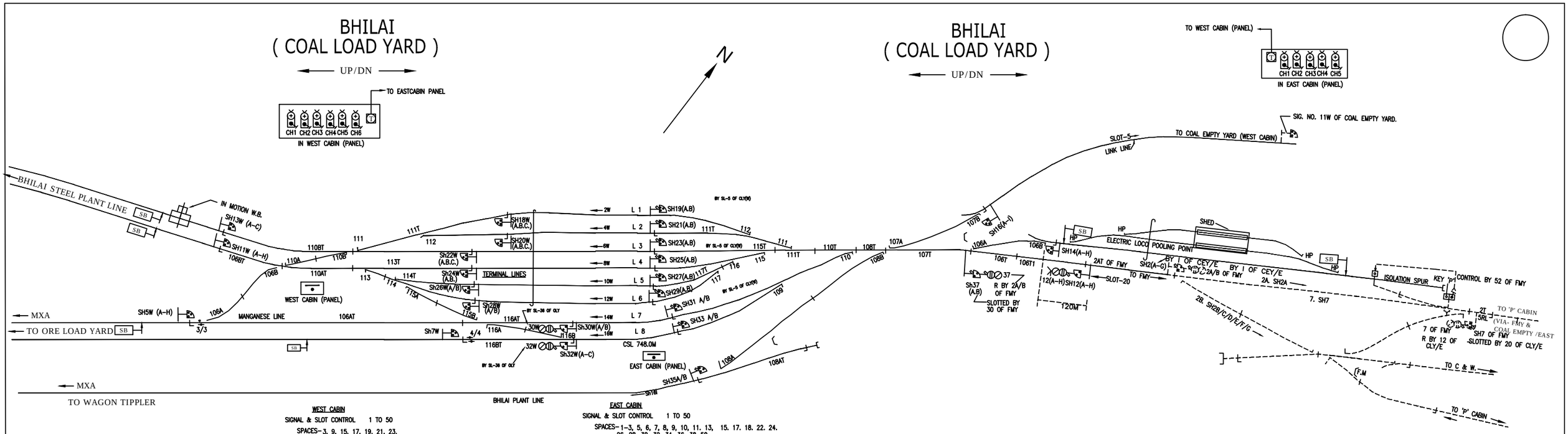

WEST CABIN

SIGNAL & SLOT CONTROL 1 TO 50

SPACES– 3. 9. 15. 17. 19. 21. 23. 25. 27. 29. 31. 33. 34–50.

POINT CONTROL 100 TO 120.

SPACES– 100 – 102, 103, 104. 105. 107–109. 117–120.

EAST CABIN

SIGNAL & SLOT CONTROL 1 TO 50

SPACES– 1–3, 5, 6, 7, 8, 9, 10, 11. 13, 15. 17. 18. 22. 24. 26. 28. 30. 32. 34. 36. 38–50.

POINT CONTROL 100. TO 120.

SPACES– 100. 113. 114. 118 – 120. (101 TO 105)

S.I. 306/11, ALT 'B'

FREIGHT MAINTENACE YARD, BHILAI

STD–III

CLASS:- 'SLP'

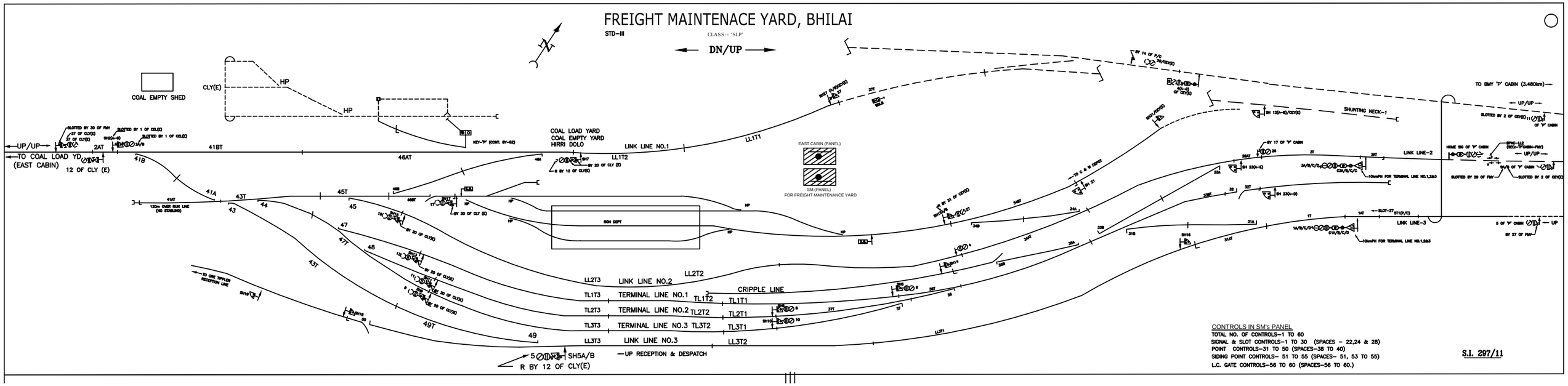

CONTROLS IN SM's PANEL

TOTAL NO. OF CONTROLS–1 TO 60

SIGNAL & SLOT CONTROLS–1 TO 30 (SPACES – 22,24 & 28)

POINT CONTROLS–31 TO 50 (SPACES–38 TO 40)

SIDING POINT CONTROLS– 51 TO 55 (SPACES– 51, 53 TO 55)

L.C. GATE CONTROLS–56 TO 60 (SPACES–56 TO 60.)

S.I. 297/11

BHILAI EXCHANGE YARD

STD-I

CLASS:- 'B'

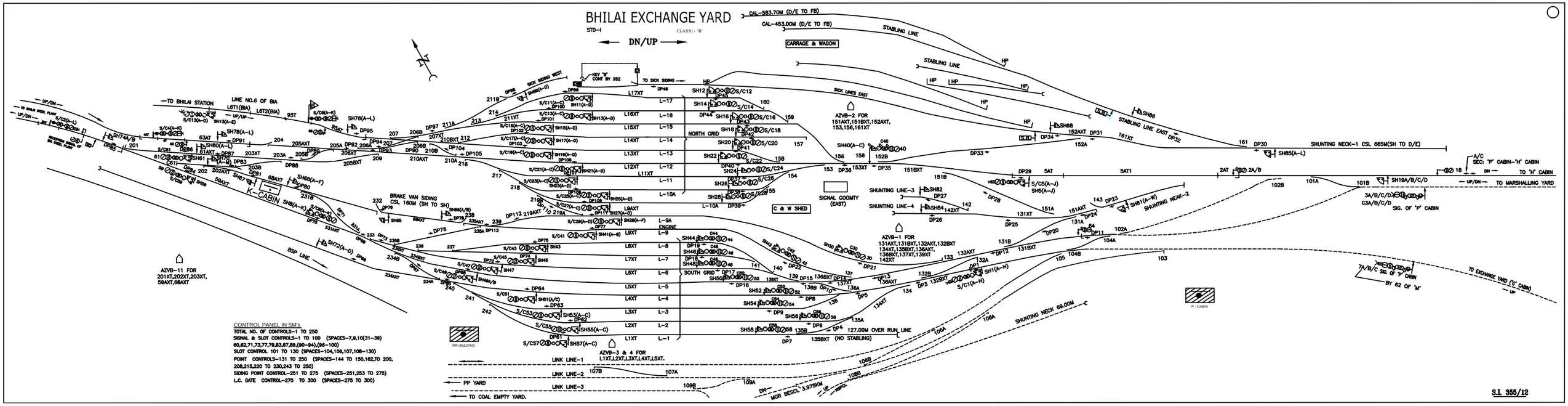

CONTROL PANEL IN SM's

TOTAL NO. OF CONTROLS-1 TO 250

SIGNAL & SLOT CONTROLS-1 TO 100 (SPACES-7,9,10(31-39) 60,62,71,73,77,79,83,87,89,(90-94),(96-100)

SLOT CONTROL 101 TO 130 (SPACES-104,106,107,108-130)

POINT CONTROLS-131 TO 250 (SPACES-144 TO 150,162,TO 200, 208,215,220 TO 230,243 TO 250)

SIDING POINT CONTROL-251 TO 275 (SPACES-251,253 TO 275)

L.C. GATE CONTROL-275 TO 300 (SPACES-275 TO 300)

S.I. 355/12

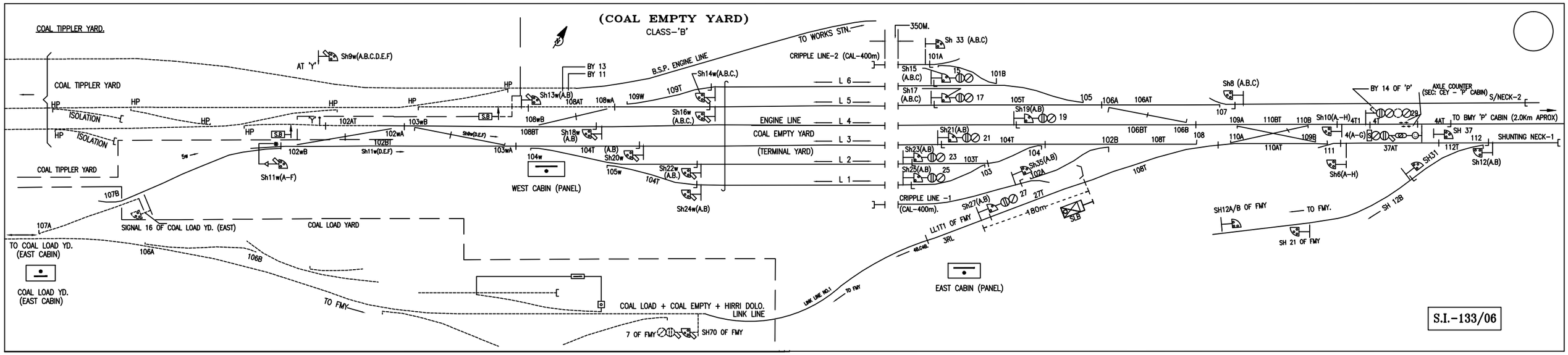
(COAL EMPTY YARD)
CLASS-'B'
COAL TIPPLER YARD.
COAL TIPPLER YARD
ISOLATION
HP
AT 'Y'
Sh9w(A.B.C.D.E.F)
BY 13
BY 11
Sh13w(A.B)
B.S.P. ENGINE LINE
Sh14w(A.B.C.)
TO WORKS STN.
CRIPPLE LINE-2 (CAL-400m)
L 6
L 5
L 4
L 3
L 2
L 1
ENGINE LINE
COAL EMPTY YARD
(TERMINAL YARD)
Sh16w (A.B.C.)
Sh18w (A.B)
Sh20w
Sh22w (A.B.)
Sh24w(A.B)
Sh11w(A-F)
Sh11w(D.E.F)
WEST CABIN (PANEL)
S.B
102AT
102wA
103wB
102wB
102BT
103wA
104w
104T
105w
104T
108AT
108wA
108wB
108BT
109W
109T
107B
107A
SIGNAL 16 OF COAL LOAD YD. (EAST)
COAL LOAD YARD
TO COAL LOAD YD.
(EAST CABIN)
COAL LOAD YD.
(EAST CABIN)
106A
106B
TO FMY.
COAL LOAD + COAL EMPTY + HIRRI DOLO.
LINK LINE
7 OF FMY
SH70 OF FMY
350M.
Sh 33 (A.B.C)
101A
101B
Sh15 (A.B.C)
Sh17 (A.B.C)
15
17
105T
105
Sh19(A.B)
19
Sh21(A.B)
21
104T
Sh23(A.B)
23
103T
Sh25(A.B)
25
103
104
Sh35(A.B)
102A
102B
108T
108B
108
CRIPPLE LINE -1
(CAL-400m).
Sh27(A.B)
27
27T
180m
SLB
LLIT1 OF FMY
3RL
LINK LINE NO.1
TO FMY
EAST CABIN (PANEL)
106A
106AT
106BT
106B
Sh8 (A.B.C)
107
109A
110BT
110B
110A
110AT
109B
Sh10(A-H)
4T1
4(A-G)
4T
29
37AT
111
Sh6(A-H)
BY 14 OF 'P'
AXLE COUNTER
(SEC: CEY – 'P' CABIN)
S/NECK-2
TO BMY 'P' CABIN (2.0Km APROX)
4AT
SH 37
112
112T
SHUNTING NECK-1
Sh12(A.B)
SH31
SH 12B
SH12A/B OF FMY
TO FMY.
SH 21 OF FMY

S.I.-133/06

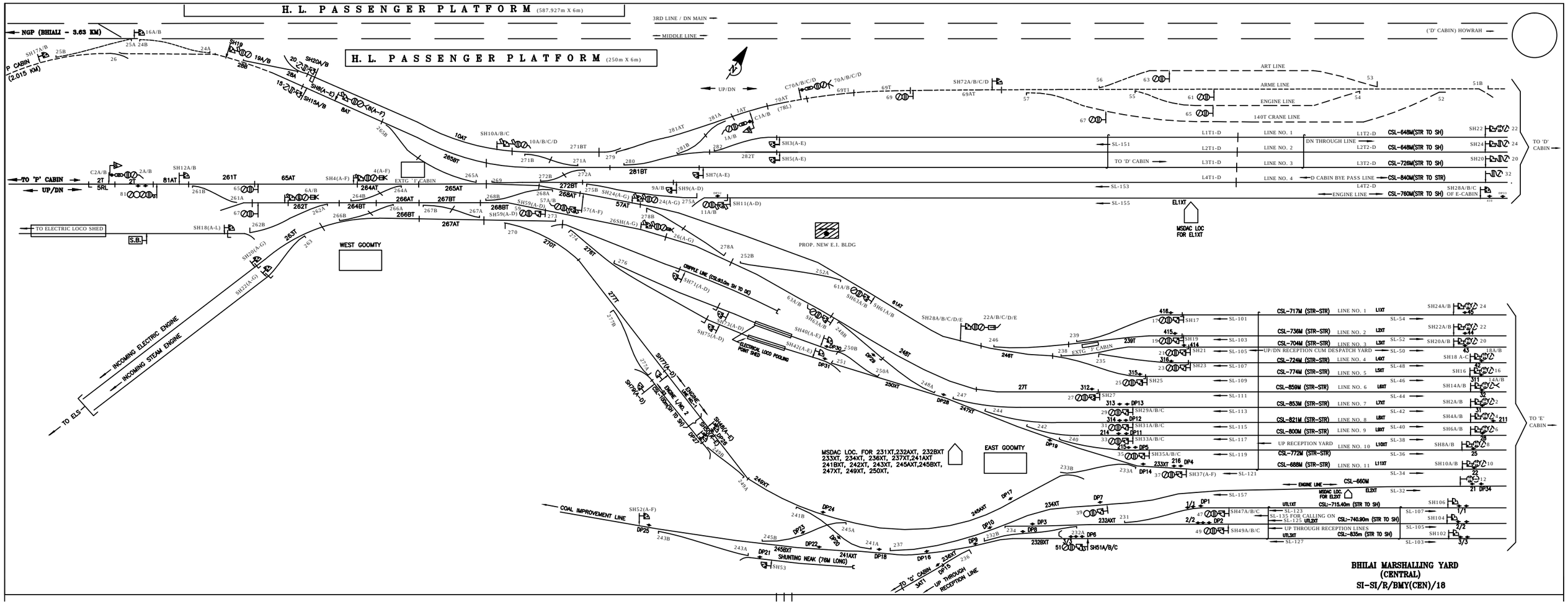
H. L. PASSENGER PLATFORM (587.927m X 6m)
H. L. PASSENGER PLATFORM (250m X 6m)
NGP (BHIALI - 3.63 KM)
P CABIN (2.015 KM)
3RD LINE / DN MAIN
MIDDLE LINE
('D' CABIN) HOWRAH
UP/DN
TO 'P' CABIN
TO ELECTRIC LOCO SHED
S.B.
WEST GOOMTY
EXTG. 'I' CABIN
PROP. NEW E.I. BLDG
EL1XT
MSDAC LOC FOR EL1XT
ART LINE
ARME LINE
ENGINE LINE
140T CRANE LINE
LINE NO. 1
LINE NO. 2
LINE NO. 3
LINE NO. 4
DN THROUGH LINE
D CABIN BYE PASS LINE
ENGINE LINE
TO 'D' CABIN
TO 'E' CABIN
INCOMING ELECTRIC ENGINE
INCOMING STEAM ENGINE
TO ELS
CRIPPLE LINE (CSL-93.0m SI TO RC)
ELECTRICAL LOCO POOLING POINT SHED
ENGINE LINE NO. 2
MSDAC LOC. FOR 231XT,232AXT, 232BXT 233XT, 234XT, 236XT, 237XT,241AXT 241BXT, 242XT, 243XT, 245AXT,245BXT, 247XT, 249XT, 250XT,
EAST GOOMTY
COAL IMPROVEMENT LINE
SHUNTING NEAK (76M LONG)
TO 'C' CABIN
UP THROUGH RECEPTION LINE
UP/DN RECEPTION CUM DESPATCH YARD
UP RECEPTION YARD
UP THROUGH RECEPTION LINES
CSL-717M (STR-STR)
CSL-736M (STR-STR)
CSL-704M (STR-STR)
CSL-724M (STR-STR)
CSL-774M (STR-STR)
CSL-859M (STR-STR)
CSL-853M (STR-STR)
CSL-821M (STR-STR)
CSL-800M (STR-STR)
CSL-772M (STR-STR)
CSL-688M (STR-STR)
CSL-648M(STR TO SH)
CSL-726M(STR TO SH)
CSL-840M(STR TO STR)
CSL-760M(STR TO SH)
CSL-660M
CSL:-715.40m (STR TO SH)
CSL:-740.90m (STR TO SH)
CSL:-835m (STR TO SH)
BHILAI MARSHALLING YARD
(CENTRAL)
SI-SI/R/BMY(CEN)/18

FREIGHT MAINTENACE YARD, BHILAI

STD–III

CLASS:- 'SLP'

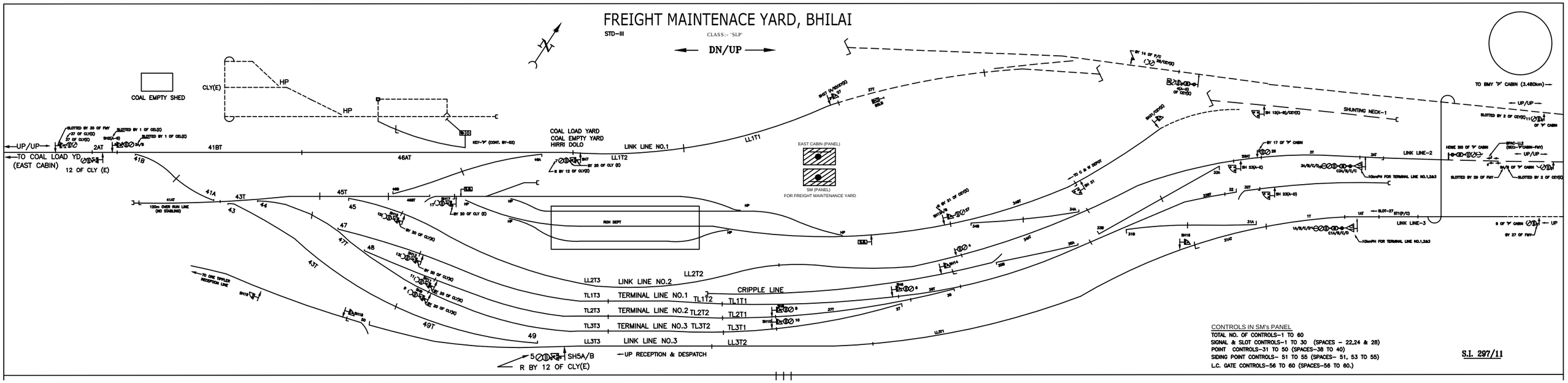

CONTROLS IN SM's PANEL

TOTAL NO. OF CONTROLS–1 TO 60

SIGNAL & SLOT CONTROLS–1 TO 30 (SPACES – 22,24 & 28)

POINT CONTROLS–31 TO 50 (SPACES–38 TO 40)

SIDING POINT CONTROLS– 51 TO 55 (SPACES– 51, 53 TO 55)

L.C. GATE CONTROLS–56 TO 60 (SPACES–56 TO 60.)

S.I. 297/11

BHILAI EXCHANGE YARD

STD-I

CLASS:- 'B'

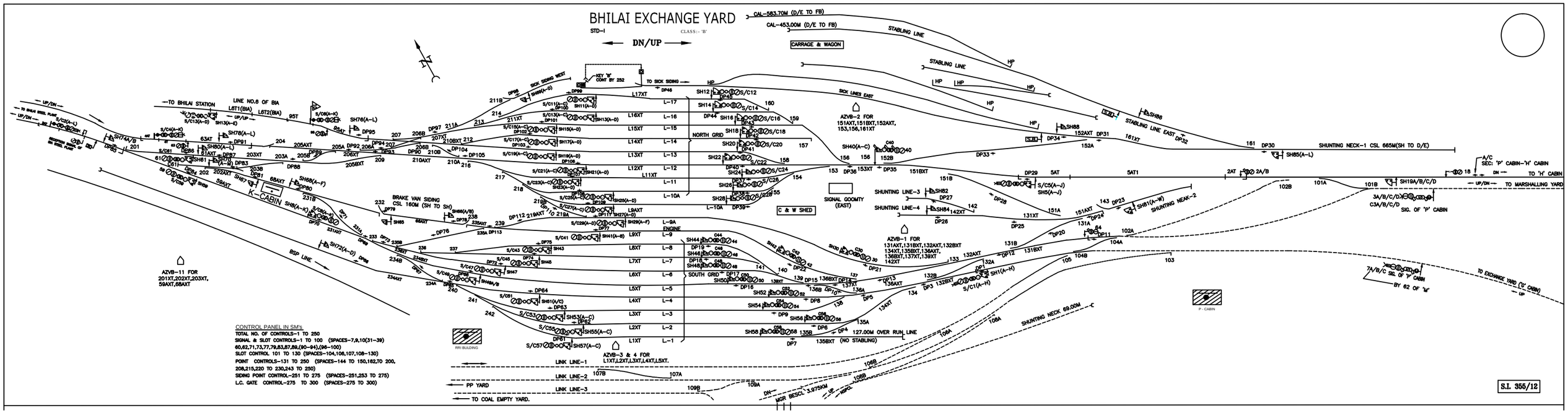

CONTROL PANEL IN SM's

TOTAL NO. OF CONTROLS-1 TO 250

SIGNAL & SLOT CONTROLS-1 TO 100 (SPACES-7,9,10(31-39) 60,62,71,73,77,79,83,87,89,(90-94),(96-100)

SLOT CONTROL 101 TO 130 (SPACES-104,106,107,108-130)

POINT CONTROLS-131 TO 250 (SPACES-144 TO 150,162,TO 200, 208,215,220 TO 230,243 TO 250)

SIDING POINT CONTROL-251 TO 275 (SPACES-251,253 TO 275)

L.C. GATE CONTROL-275 TO 300 (SPACES-275 TO 300)

S.I. 355/12

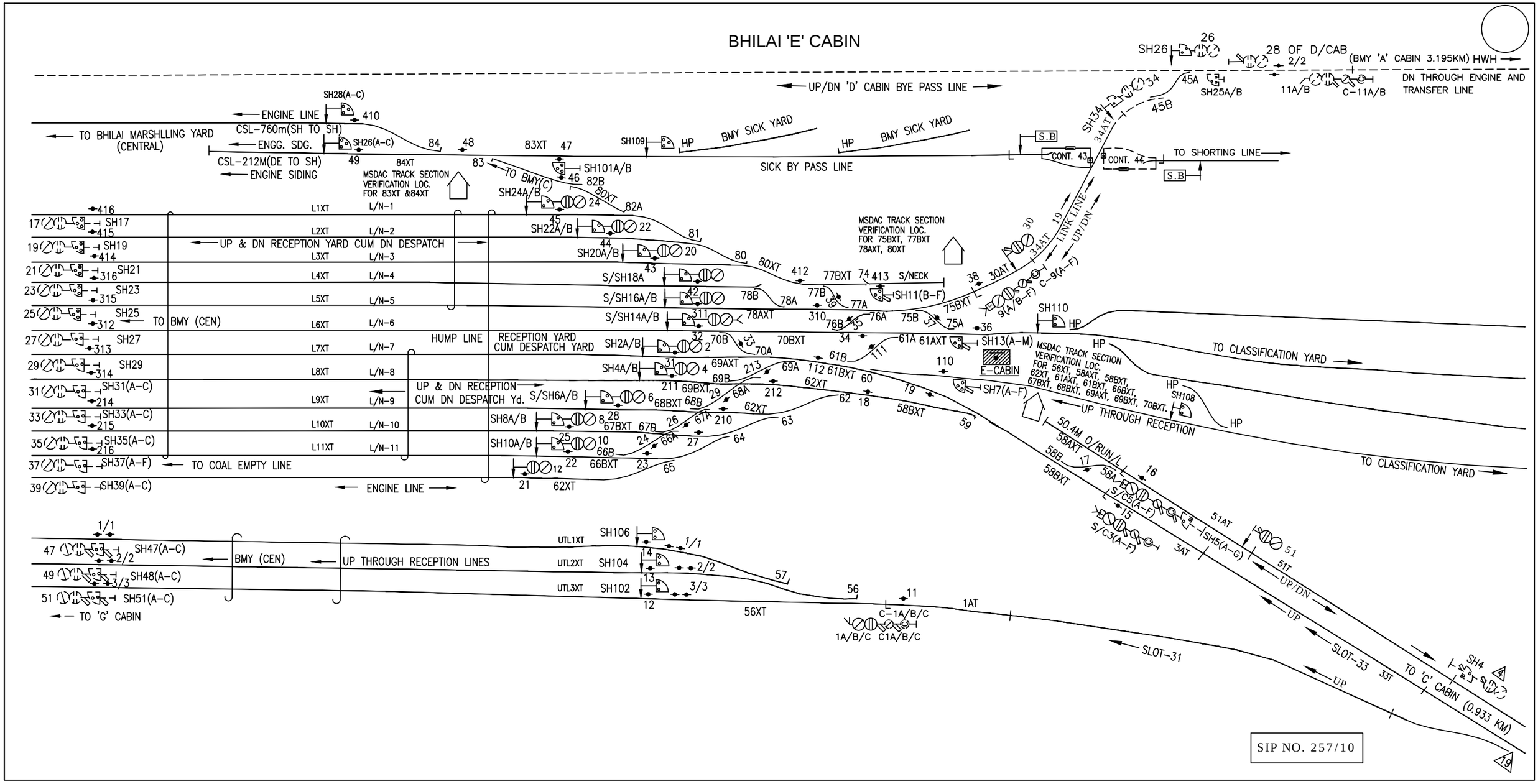
BHILAI 'E' CABIN
UP/DN 'D' CABIN BYE PASS LINE
SH26
26
28 OF D/CAB
2/2
(BMY 'A' CABIN 3.195KM) HWH
DN THROUGH ENGINE AND TRANSFER LINE
SH25A/B
11A/B
C-11A/B
45A
45B
SH34
34
34AT
SH28(A-C)
410
ENGINE LINE
CSL-760m(SH TO SH)
TO BHILAI MARSHLLING YARD (CENTRAL)
ENGG. SDG.
SH26(A-C)
CSL-212M(DE TO SH)
ENGINE SIDING
84
48
83XT
47
SH109
HP
BMY SICK YARD
HP
BMY SICK YARD
S.B
CONT. 43
CONT. 44
TO SHORTING LINE
S.B
SICK BY PASS LINE
49
84XT
83
MSDAC TRACK SECTION VERIFICATION LOC. FOR 83XT &84XT
TO BMY(C)
SH101A/B
46
82B
80XT
SH24A/B
24
82A
416
L1XT
L/N-1
17
SH17
415
L2XT
L/N-2
SH22A/B
45
22
81
19
SH19
414
UP & DN RECEPTION YARD CUM DN DESPATCH
L3XT
L/N-3
SH20A/B
44
20
80
80XT
21
SH21
316
L4XT
L/N-4
S/SH18A
43
412
77BXT
74
413
S/NECK
23
SH23
315
L5XT
L/N-5
S/SH16A/B
42
78B
78A
77B
77A
SH11(B-F)
MSDAC TRACK SECTION VERIFICATION LOC. FOR 75BXT, 77BXT 78AXT, 80XT
30
34AT
19
LINK LINE
UP/DN
38
30AT
C-9(A-F)
9(A/B-F)
75BXT
25
SH25
312
TO BMY (CEN)
L6XT
L/N-6
S/SH14A/B
311
78AXT
310
76B
35
76A
75B
37
75A
36
SH110
HP
27
SH27
313
L7XT
L/N-7
HUMP LINE
RECEPTION YARD CUM DESPATCH YARD
SH2A/B
32
2
70B
33
70A
70BXT
34
61A
61AXT
SH13(A-M)
HP
TO CLASSIFICATION YARD
29
SH29
314
L8XT
L/N-8
SH4A/B
31
4
69AXT
213
69A
112
61BXT
60
61B
111
110
E-CABIN
MSDAC TRACK SECTION VERIFICATION LOC. FOR 56XT, 58AXT, 58BXT, 62XT, 61AXT, 61BXT, 66BXT, 67BXT, 68BXT, 69AXT, 69BXT, 70BXT.
31
SH31(A-C)
214
L9XT
L/N-9
UP & DN RECEPTION CUM DN DESPATCH Yd.
S/SH6A/B
6
211
69BXT
29
69B
68A
212
62XT
19
SH7(A-F)
HP
SH108
HP
UP THROUGH RECEPTION
33
SH33(A-C)
215
L10XT
L/N-10
SH8A/B
8
28
67BXT
67B
26
67A
210
62
18
58BXT
59
63
50.4M O/RUN/L
35
SH35(A-C)
216
L11XT
L/N-11
SH10A/B
10
25
66B
24
66A
27
64
58AXT
58B
17
58A
16
TO CLASSIFICATION YARD
37
SH37(A-F)
TO COAL EMPTY LINE
66BXT
22
23
65
58BXT
S/C5(A-F)
15
39
SH39(A-C)
ENGINE LINE
12
21
62XT
S/C3(A-F)
51AT
SH5(A-G)
51
51T
3AT
UP/DN
1/1
47
SH47(A-C)
2/2
BMY (CEN)
UP THROUGH RECEPTION LINES
UTL1XT
SH106
1/1
14
UP
49
SH48(A-C)
3/3
UTL2XT
SH104
2/2
13
57
SLOT-33
33T
51
SH51(A-C)
UTL3XT
SH102
3/3
12
56
11
1AT
SLOT-31
UP
TO 'C' CABIN (0.933 KM)
SH4
TO 'G' CABIN
56XT
C-1A/B/C
1A/B/C
C1A/B/C

SIP NO. 257/10

← DN/UP →

DHAMTARI

KM:910.892 (F/HWH)

'B' CLASS STD II(R)

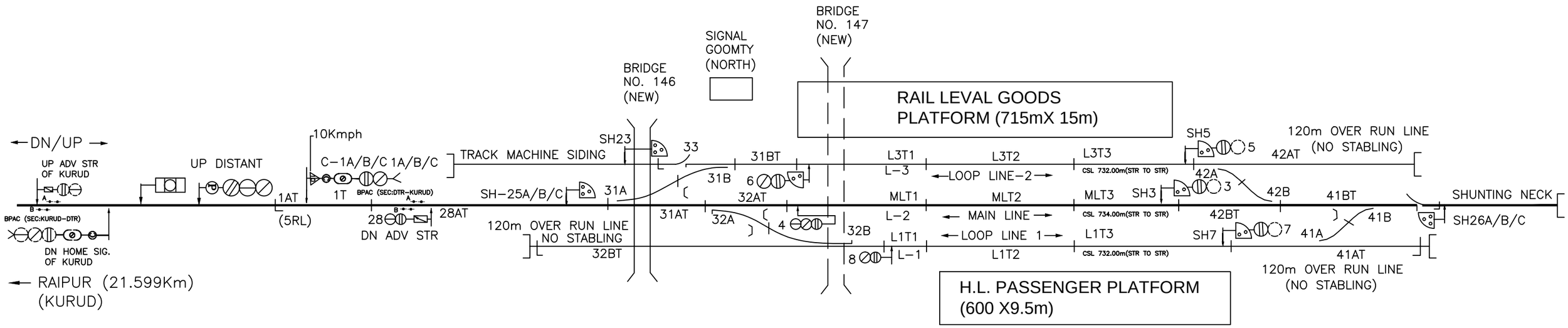

CONTROL IN SM's VDU

TOTAL NO. OF CONTROLS–1 TO 60

SIGNAL CONTROLS–1 TO 30 (SPACES – 2,9–22,24,27,29&30)

POINT CONTROLS–31 TO 50 (SPACES–34 – 40, 44 – 50)

OTHER CONTROLS–51 TO 60 (SPACES–51 TO 60)

SI–S.I./R/DTR/2020

SOUTH EAST CENTRAL RAILWAY

RAIPUR DIVISION

(MINIATURE OF S.I. PLAN)

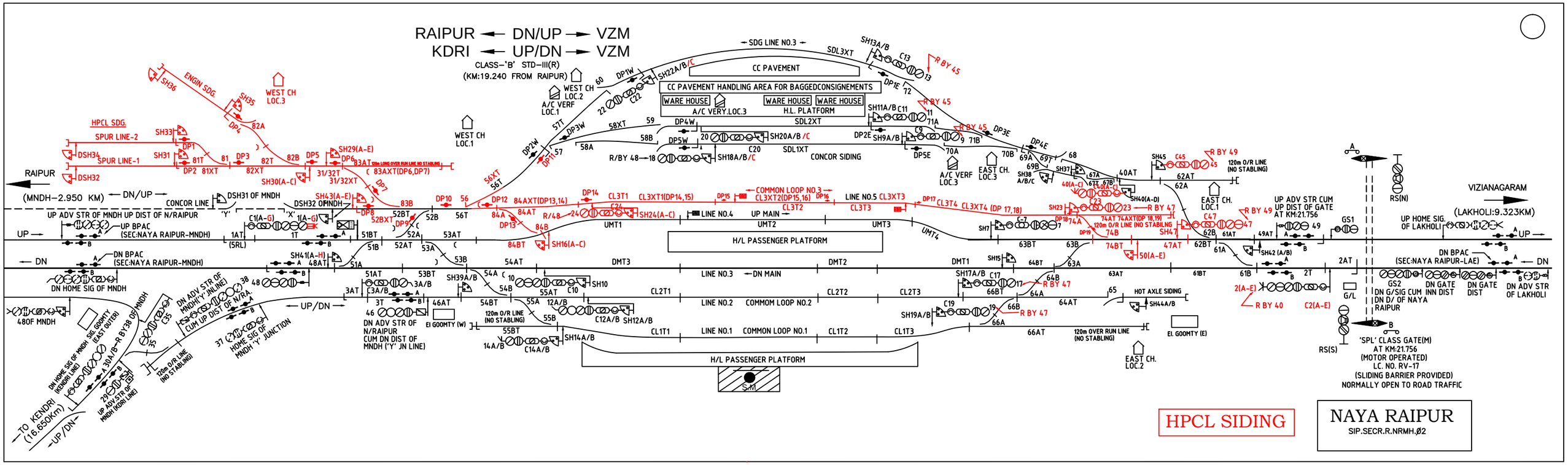
RAIPUR ← DN/UP → VZM
KDRI ← UP/DN → VZM
CLASS-'B' STD-III(R)
(KM:19.240 FROM RAIPUR)
SDG LINE NO.3
CC PAVEMENT
CC PAVEMENT HANDLING AREA FOR BAGGEDCONSIGNEMENTS
WARE HOUSE
A/C VERY.LOC.3
H.L. PLATFORM
SDL2XT
SDL1XT
CONCOR SIDING
WEST CH LOC.2
A/C VERF LOC.1
WEST CH LOC.1
WEST CH LOC.3
ENGIN SDG.
HPCL SDG.
SPUR LINE-2
SPUR LINE-1
RAIPUR
(MNDH-2.950 KM)
DN/UP
CONCOR LINE
UP ADV STR OF MNDH UP DIST OF N/RAIPUR
UP BPAC (SEC:NAYA RAIPUR-MNDH)
DN BPAC (SEC:NAYA RAIPUR-MNDH)
DN HOME SIG OF MNDH
480F MNDH
UP/DN
DN ADV STR OF N/RAIPUR CUM DN DIST OF MNDH ('Y' JN LINE)
EI GOOMTY (W)
120m O/R LINE (NO STABLING)
COMMON LOOP NO.3
LINE NO.5
LINE NO.4
UP MAIN
H/L PASSENGER PLATFORM
LINE NO.3
DN MAIN
LINE NO.2
COMMOM LOOP NO.2
LINE NO.1
COMMON LOOP NO.1
HOT AXLE SIDING
EI. GOOMTY (E)
120m OVER RUN LINE (NO STABLING)
EAST CH. LOC.2
EAST CH. LOC.1
EAST CH. LOC.3
UP ADV STR CUM UP DIST OF GATE AT KM:21.756
VIZIANAGARAM
(LAKHOLI:9.323KM)
UP HOME SIG. OF LAKHOLI
DN BPAC (SEC:NAYA RAIPUR-LAE)
DN ADV STR OF LAKHOLI
DN GATE DIST
DN GATE INN DIST
DN G/SIG CUM DN D/ OF NAYA RAIPUR
'SPL' CLASS GATE(M) AT KM:21.756 (MOTOR OPERATED) LC. NO. RV-17 (SLIDING BARRIER PROVIDED) NORMALLY OPEN TO ROAD TRAFFIC
TO KENDRI (16.650Km)
HPCL SIDING
NAYA RAIPUR
SIP.SECR.R.NRMH.Ø2

INDEX

S.NO.	STATION NAME	S.NO.	STATION NAME
1	DADHAPARA–BILASPUR AUTO SIG	34	BHILAI NAGAR
2	DADHAPARA	35	DURG LINK BLOCK STN
3	BELHA–DADHAPARA AUTO SIG.	36	DURG
4	BELHA	37	MARAUDA
5	DAGORI–BELHA IBH	38	RISAMA
6	DAGORI	39	GUNDERDEHI
7	NIPANIA–DAGORI IBH	40	LATABOR
8	NIPANIA	41	BALOD
9	NIPANIA–BHATAPARA IBH	42	KUSUMKASA
10	BHATAPARA	43	DALLIRAJHRA
11	BHATAPARA–HATHBANDH IBH	44	GUDUM
12	HATHBANDH	45	BHANUPRATAPPUR
13	HATHBANDH–TILDA IBH	46	KEOTI
14	TILDA	47	ANTAGARH
15	BAIKUNTH	48	TAROKI
16	SILYARI–BAIKUNTH IBH	49	BURGAHON
17	SILYARI	50	JAMUL CEMENT WORK
18	SILYARI–MANDHAR IBH	51	RAIPUR JUNCTION BLOCK CABIN
19	MANDHAR	52	RAIPUR STORE DEPOT
20	URKURA–MANDHAR IBH	53	MANDIRHASAUD
21	URKURA	54	NAYA RAIPUR
22	SARONA–URKURA IBH (BYE PASS)	55	KENDRI
23	RAIPUR	56	LAKHOLI
24	IBH R–SZB	57	ABHANPUR
25	SARONA	58	P CABIN
26	KUMHARI	59	ORE EMPTY & ORE LOAD YARD
27	BHILAI 'A' CABIN	60	COAL LOAD YARD
28	BHILAI 'D' CABIN	61	COAL EMPTY YARD
29	BHILAI 'H' CABIN	62	BHILAI MARSHLLING YARD (CENTRAL)
30	UP MAIN 'G' CABIN	63	FREIGHT MAINTENACE BHILAI
31	UP MAIN 'C' CABIN	64	BHILAI EXCHANGE YARD
32	BHILAI	65	BHILAI 'E' CABIN
33	AUTOMATIC SIGNALLING BIA–BQR		

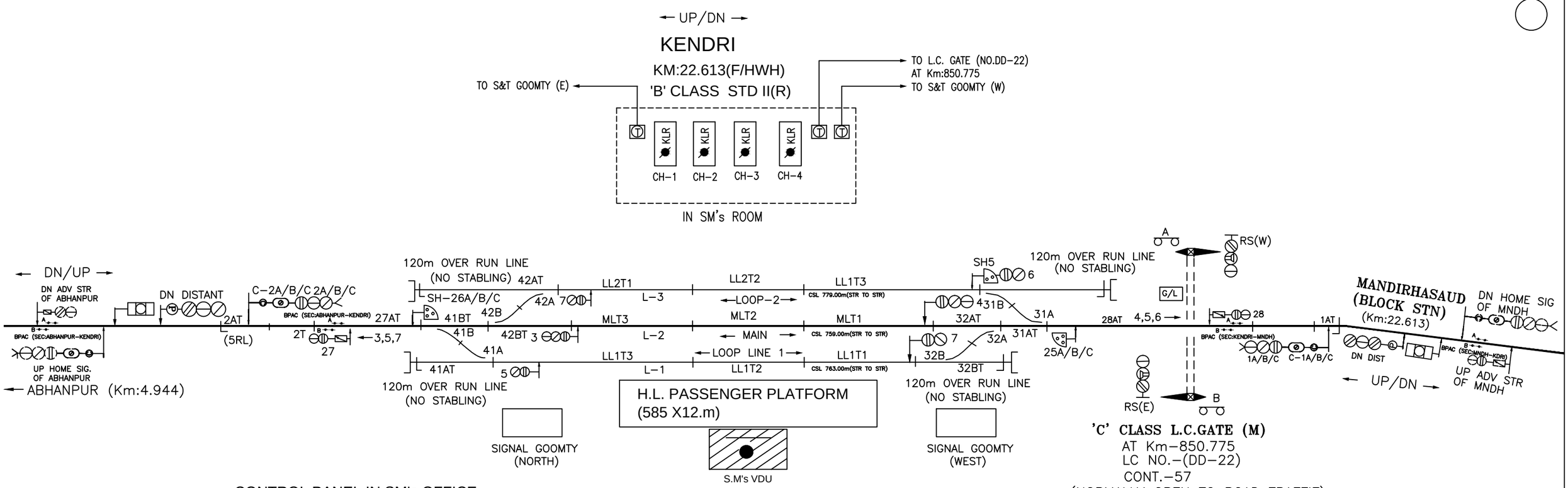

CONTROL PANEL IN SM's OFFICE

TOTAL NO. OF CONTROLS-1 TO 60

SIGNAL & CONTROLS-1 TO 30 (SPACES - 9 TO 24,29&30)

POINT CONTROLS-31 TO 50 (SPACES-33 TO 40, 43 TO 50)

OTHER CONTROLS-51 TO 60 (SPACES-56,58 TO 60)

SI-S.I./R/KDRI/2021

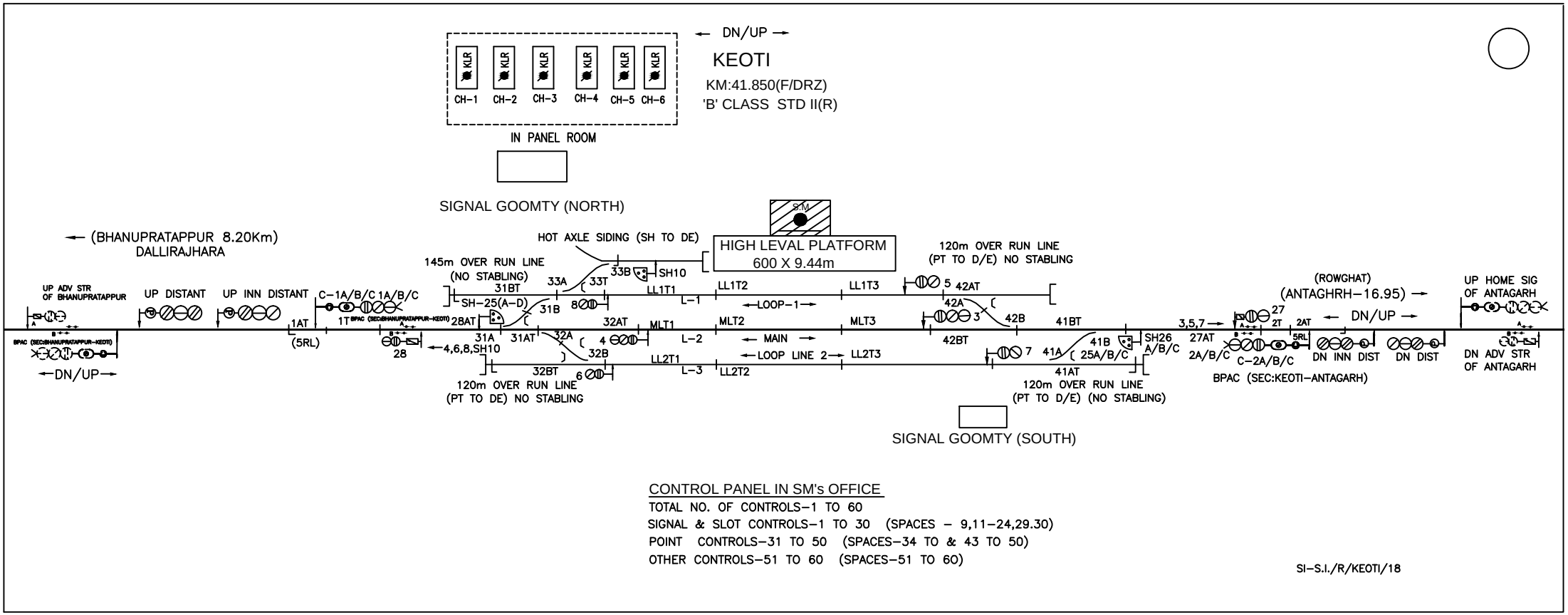

CONTROL PANEL IN SM's OFFICE

TOTAL NO. OF CONTROLS-1 TO 60

SIGNAL & SLOT CONTROLS-1 TO 30 (SPACES - 9,11-24,29.30)

POINT CONTROLS-31 TO 50 (SPACES-34 TO & 43 TO 50)

OTHER CONTROLS-51 TO 60 (SPACES-51 TO 60)

SI-S.I./R/KEOTI/18

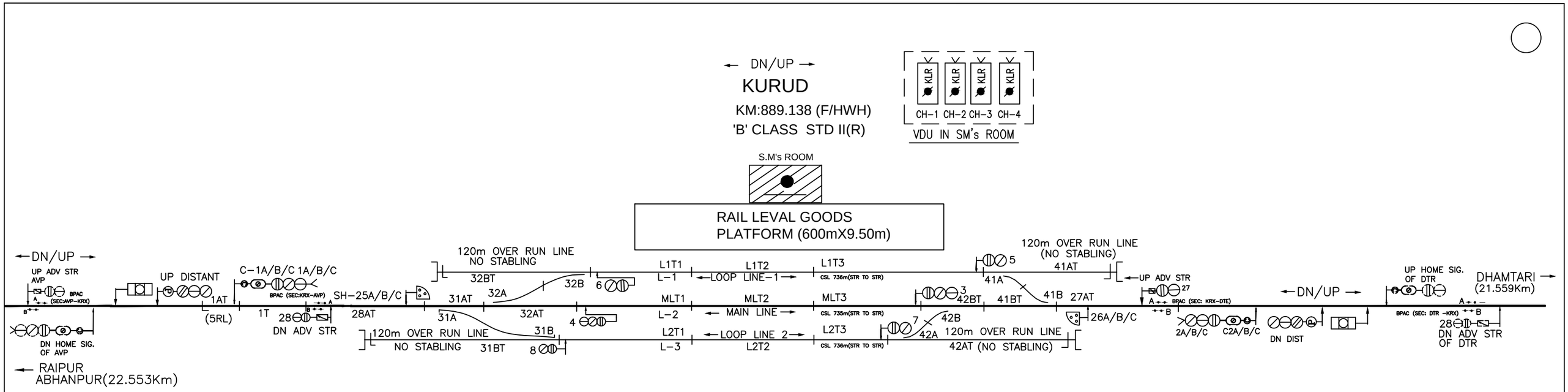

CONTROL IN SM's VDU

TOTAL NO. OF CONTROLS-1 TO 60

SIGNAL CONTROLS-1 TO 30 (SPACES - 9-24,29&30)

POINT CONTROLS-31 TO 50 (SPACES-33-40 & 43-50)

OTHER CONTROLS-51 TO 60 (SPACES-51 TO 60)

SI-S.I./R/KRX/2020

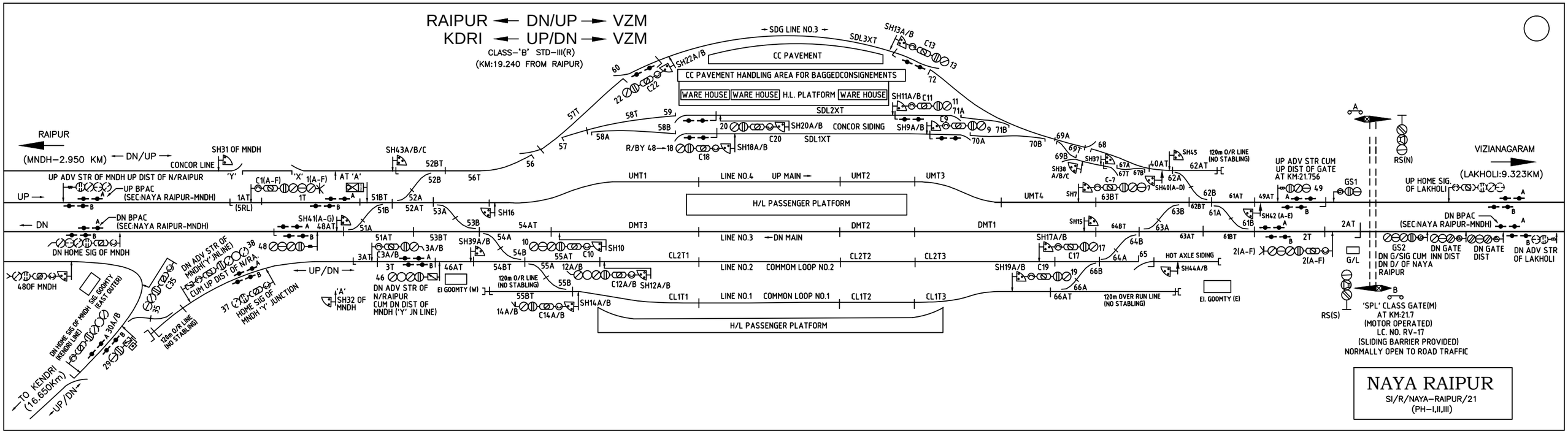
RAIPUR ← DN/UP → VZM
KDRI ← UP/DN → VZM
CLASS–'B' STD–III(R)
(KM:19.240 FROM RAIPUR)
SDG LINE NO.3
SDL3XT
SH13A/B
C13
CC PAVEMENT
CC PAVEMENT HANDLING AREA FOR BAGGEDCONSIGNEMENTS
WARE HOUSE
WARE HOUSE
H.L. PLATFORM
WARE HOUSE
SH22A/B
C22
SH11A/B
C11
SDL2XT
SH20A/B
CONCOR SIDING
SH9A/B
C9
SDL1XT
C20
R/BY 48
SH18A/B
C18
RAIPUR
(MNDH–2.950 KM)
DN/UP
CONCOR LINE
SH31 OF MNDH
SH43A/B/C
UP ADV STR OF MNDH UP DIST OF N/RAIPUR
UP BPAC
(SEC:NAYA RAIPUR–MNDH)
UP
DN
DN BPAC
(SEC:NAYA RAIPUR–MNDH)
DN HOME SIG OF MNDH
480F MNDH
SIG GOOMTY (EAST OUTER)
DN HOME SIG OF MNDH (KENDRI LINE)
TO KENDRI (16.650Km)
UP/DN
DN ADV STR OF MNDH('Y' JN LINE) CUM UP DIST OF N/RA
120m O/R LINE (NO STABLING)
HOME SIG OF MNDH 'Y' JUNCTION
UP/DN
SH32 OF MNDH
DN ADV STR OF N/RAIPUR CUM DN DIST OF MNDH ('Y' JN LINE)
EI GOOMTY (W)
120m O/R LINE (NO STABLING)
UMT1
LINE NO.4
UP MAIN
UMT2
UMT3
UMT4
H/L PASSENGER PLATFORM
DMT3
DMT2
DMT1
LINE NO.3
DN MAIN
CL2T1
CL2T2
CL2T3
LINE NO.2
COMMOM LOOP NO.2
CL1T1
LINE NO.1
COMMON LOOP NO.1
CL1T2
CL1T3
H/L PASSENGER PLATFORM
SH16
SH39A/B
SH10
C10
C12A/B
SH12A/B
SH14A/B
C14A/B
SH19A/B
C19
SH17A/B
C17
HOT AXLE SIDING
SH44A/B
120m OVER RUN LINE (NO STABLING)
EI. GOOMTY (E)
SH45
120m O/R LINE (NO STABLING)
SH37
SH38 A/B/C
SH40(A–D)
SH7
SH15
SH42 (A–E)
UP ADV STR CUM UP DIST OF GATE AT KM:21.756
GS1
RS(N)
VIZIANAGARAM
(LAKHOLI:9.323KM)
UP HOME SIG. OF LAKHOLI
DN BPAC
(SEC:NAYA RAIPUR–MNDH)
GS2
DN G/SIG CUM DN D/ OF NAYA RAIPUR
DN GATE INN DIST
DN GATE DIST
DN ADV STR OF LAKHOLI
G/L
RS(S)
'SPL' CLASS GATE(M)
AT KM:21.7
(MOTOR OPERATED)
LC. NO. RV–17
(SLIDING BARRIER PROVIDED)
NORMALLY OPEN TO ROAD TRAFFIC
NAYA RAIPUR
SI/R/NAYA–RAIPUR/21
(PH–I,II,III)

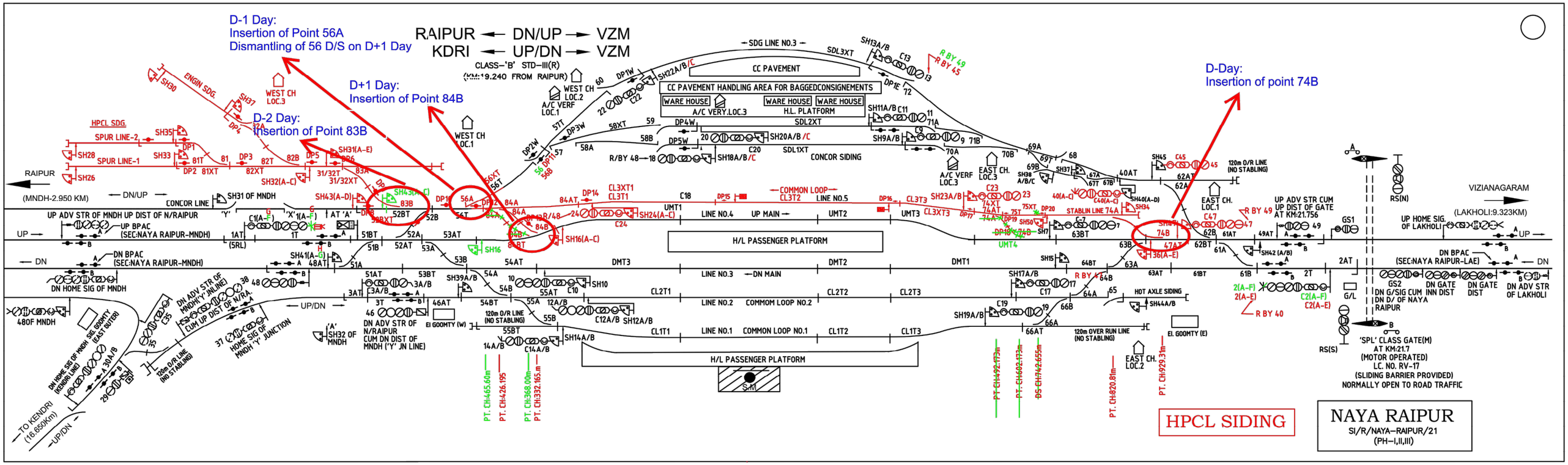
D-1 Day:
Insertion of Point 56A
Dismantling of 56 D/S on D+1 Day
D+1 Day:
Insertion of Point 84B
D-2 Day:
Insertion of Point 83B
D-Day:
Insertion of point 74B
RAIPUR ← DN/UP → VZM
KDRI ← UP/DN → VZM
CLASS-'B' STD-III(R)
(KM:19.240 FROM RAIPUR)
CC PAVEMENT
CC PAVEMENT HANDLING AREA FOR BAGGEDCONSIGNEMENTS
WARE HOUSE
A/C VERY.LOC.3
WARE HOUSE
H.L. PLATFORM
WARE HOUSE
CONCOR SIDING
H/L PASSENGER PLATFORM
H/L PASSENGER PLATFORM
HPCL SIDING
NAYA RAIPUR
SI/R/NAYA-RAIPUR/21
(PH-I,II,III)
'SPL' CLASS GATE(M)
AT KM:21.7
(MOTOR OPERATED)
LC. NO. RV-17
(SLIDING BARRIER PROVIDED)
NORMALLY OPEN TO ROAD TRAFFIC
VIZIANAGARAM
(LAKHOLI:9.323KM)
RAIPUR
(MNDH-2.950 KM)
TO KENDRI
(16.650Km)

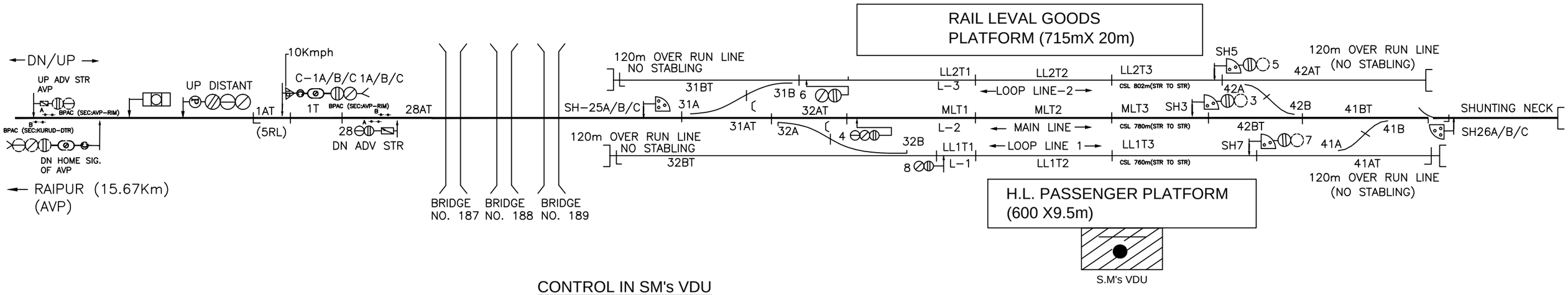

CONTROL IN SM's VDU

TOTAL NO. OF CONTROLS-1 TO 60

SIGNAL CONTROLS-1 TO 30 (SPACES - 2,9-24,27,29&30)

POINT CONTROLS-31 TO 50 (SPACES-34 - 40, 44 - 50)

OTHER CONTROLS-51 TO 60 (SPACES-51 TO 60)

SI-S.I./R/RIM/2020

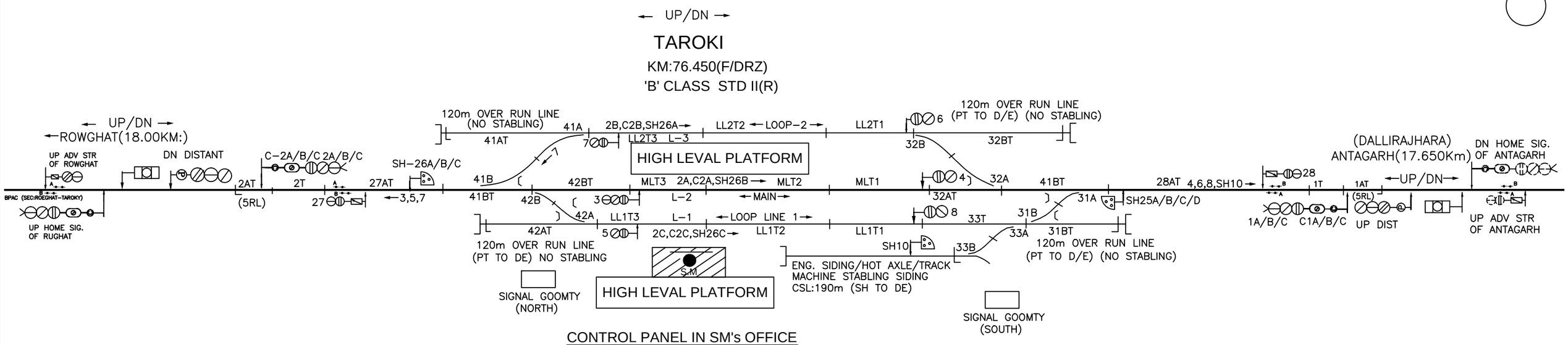

CONTROL PANEL IN SM's OFFICE

TOTAL NO. OF CONTROLS–1 TO 60

SIGNAL & SLOT CONTROLS–1 TO 30 (SPACES –9.11–24,29,30)

POINT CONTROLS–31 TO 50 (SPACES–36 TO 40, 43 TO 50)

OTHER CONTROLS–51 TO 60 (SPACES–51 TO 60)

SI–S.I./R/TAROKI/19